## SECTION 1 - THE SCHEDULE

CONTINUATION TO SF-1449
RFQ NUMBER STC1020Q0009
PRICES, BLOCK 23

**1.** PERFORMANCE WORK STATEMENT

This is a firm fixed price contract for a Contractor to perform all works to remove settleable and floatable solids including sludge and scum, clean the sewage tanks and sewage lift station, remove grease and clean grease trap, as well as remove other wastes and flush out the storm water drain manholes and its associated pipes located inside the U.S. Embassy's Compound. The Contractor shall have Abu Dhabi Municipality permit to engage in Sewage, Kitchen Grease Trap and Storm Water Drain handling and to provide all resources, including direct labor, tools, equipment, supplies and permits required to accomplish the work described below. The contract will be for a one-year period from the date of the contract award, with four, one-year options.

**2.0 PRICING**

2.1 VALUE ADDED TAX

**VAT VERSION A**

VALUE ADDED TAX. Value Added Tax (VAT) is not included in the CLIN rates. Instead, it will be priced as a separate line item in the contract and on Invoices. Local law dictates the portion of the contract price that is subject to VAT; this percentage is multiplied only against that portion. It is reflected for each performance period. The portions of the solicitation subject to VAT are:

2.2. Base Year: The Contractor shall provide the services shown below for the base period of the contract, starting on the date stated in the Notice to Proceed and continuing for a period of 12 months. The fixed unit prices, estimated quantities, and ceiling for each category are:

| CLIN | Description | Quantity of Equipment | Type of services | No. of service | Unit price / service (AED) | Total per year (AED) |
|---|---|---|---|---|---|---|
| 001 | Remove solids, sludge and clean Sewage tank of 30000 liter capacity | 2 | Annual | 1 | | |
| 002 | Remove sludge, grease and clean Grease Trap of 5000 liter capacity | 1 | Semi - Annual | 2 | | |
| 003 | Remove solids, waste and flush Storm Water Drain manholes and its associated pipes | 25 | Annual | 1 | | |
| | Total Base Year | | | | | |

| | |
|---|---|
| DBA insurance for the Base year (estimate only) in AED | |

2.3. Option Year 1: The Contractor shall provide the services shown below for Option Year 1 of the contract, and continuing for a period of 12 months.

| CLIN | Description | Quantity of Equipment | Type of services | No. of service | Unit price / service (AED) | Total per year (AED) |
|---|---|---|---|---|---|---|
| 001 | Remove solids, sludge and clean Sewage tank of 30000 liter capacity | 2 | Annual | 1 | | |
| 002 | Remove sludge, grease and clean Grease Trap of 5000 liter capacity | 1 | Semi Annual | 2 | | |
| 003 | Remove solids, waste and flush Storm Water Drain manholes and its associated pipes | 25 | Annual | 1 | | |
| | Total Option Year 1 | | | | | |

| | |
|---|---|
| DBA insurance for the First option year (estimate only) in AED | |

2.4. Option Year 2: The Contractor shall provide the services shown below for Option Year 2 of the contract, and continuing for a period of 12 months.

| CLIN | Description | Quantity of Equipment | Type of services | No. of service | Unit price / service (AED) | Total per year (AED) |
|---|---|---|---|---|---|---|
| 001 | Remove solids, sludge and clean Sewage tank of 30000 liter capacity | 2 | Annual | 1 | | |
| 002 | Remove sludge, grease and clean Grease Trap of 5000 liter capacity | 1 | Semi - Annual | 2 | | |
| 003 | Remove solids, waste and Flush Storm Water Drain manholes and its associated pipes | 25 | Annual | 1 | | |
| | Total Option Year 2 | | | | | |

| | |
|---|---|
| DBA insurance for the Second option year (estimate only) in AED | |

2.5. Option Year 3: The Contractor shall provide the services shown below for Option Year 3 of the contract, and continuing for a period of 12 months.

| CLIN | Description | Quantity of Equipment | Type of services | No. of service | Unit price / service (AED) | Total per year (AED) |
|---|---|---|---|---|---|---|
| 001 | Remove solids, sludge and clean Sewage tank of 30000 liter capacity | 2 | Annual | 1 | | |
| 002 | Remove sludge, grease and clean Grease Trap of 5000 liter capacity | 1 | Semi - Annual | 2 | | |
| 003 | Remove solids, waste and Flush Storm Water Drain manholes and its associated pipes | 25 | Annual | 1 | | |
| | Total Option Year 3 | | | | | |

| | |
|---|---|
| DBA insurance for the Third option year (estimate only) in AED | |

2.6. Option Year 4: The Contractor shall provide the services shown below for Option Year 4 of the contract, and continuing for a period of 12 months.

| CLIN | Description | Quantity of Equipment | Type of services | No. of service | Unit price / service (AED) | Total per year (AED) |
|---|---|---|---|---|---|---|
| 001 | Remove solids, sludge and clean Sewage tank of 30000 liter capacity | 2 | Annual | 1 | | |
| 002 | Remove sludge and grease and clean Grease Trap of 5000 liter capacity | 1 | Semi - Annual | 2 | | |
| 003 | Remove solids, waste and Flush Storm Water Drain manholes and its associated pipes | 25 | Annual | 1 | | |
| | Total Option Year 4 | | | | | |

| | |
|---|---|
| DBA insurance for the Fourth option year (estimate only) in AED | |

**Summary of Offers**

| | |
|---|---|
| Base Year Total (AED) | |
| Option Year 1 Total (AED) | |
| Option Year 2 Total (AED) | |
| Option Year 3 Total (AED) | |
| Option Year 4 Total (AED) | |
| **GRAND TOTAL OF BASE YEAR PLUS ALL OPTION YEARS (AED)** | |

| | |
|---|---|
| DBA insurance for five years (base plus four option years) in AED | |

CONTINUATION TO SF-1449,
RFQ NUMBER ***19TC1020Q0009***
DESCRIPTION/SPECIFICATIONS/WORK STATEMENT

## 1.0 INTRODUCTION

1.1 This is a firm-fixed-price contract to provide cleaning services for sewage tanks, sewage lift station, kitchen grease trap, and storm water drain manholes and its associated pipes located inside the Embassy Compound at the U.S. Embassy, Abu Dhabi UAE ("Embassy"). The Contractor shall have Abu Dhabi Municipality permit to engage in Sewage, Kitchen Grease Trap and Storm Water Drain handling operations and to provide all resources, including direct labor, tools, equipment, supplies and permits required to accomplish the work described below.

1.2 Sewage Tank: There are two 30000 liter fiberglass anaerobic sewage pretreatment underground tanks. The tanks receive sewage from the Embassy facility and are designed to remove settle-able and float-able solids from the effluent before it flows to the Sewage Lift Station for pumping into the Constructed Wetlands for treatment.

1.3 Kitchen Grease Trap: There is one 5000 liter concrete grease trap underground tank. The tank receives wastewater from the kitchen in the Embassy facility and is designed to remove grease laden settle-able and float-able solids from the effluent before it flows to the wastewater drainage.

1.4 Storm Drain Manholes: There are twenty five (25) numbers of storm water drain manholes installed at the Embassy that collect storm / rain water and passes it to the Municipality storm drain manholes.

## 2.0 WORK REQUIREMENT

2.1 Sewage Tanks:

a. The Contractor shall survey the sewage tanks and provide services to remove all settle-able and float-able solids including sludge and scum and to clean the sewage tanks and sewage lift station located inside the Embassy.

b. The sludge shall be pumped by a sewage cleaning system and hauled to the Municipality wastewater treatment plant for disposal.

c. Level/percentage of sewer sludge removal from both sewer tanks shall be decided while performing the service, based on the tank condition and/or direction by the on-site Embassy representative.

d. Contractor may require using appropriately rated pump attached vehicle multiple times, until required level of cleaning is accomplished.

2.2 Kitchen Grease Trap:

a. The Contractor shall survey the Kitchen Grease Trap and provide service to remove Grease buildup in the trap.

b. The Grease buildup shall be pumped by a suitable cleaning equipment / system and hauled to the Municipality wastewater treatment plant for disposal.

c. Contractor is required to do thoroughly clean the grease trap. Once cleaning is completed, the grease pit will be inspected by Embassy on-site representative.

2.3 Storm Water Drain:

a. The Contractor shall survey the Storm Water Drain manholes and provide service to remove solids and accumulated wastes and flush all the manholes and its associated pipes.

b. The accumulated waste shall be pumped by a Storm drain cleaning system and hauled to the Municipality wastewater treatment plant for disposal.

c. Contractor is required to do thoroughly clean all storm water drain pits and interconnecting pipes. Once cleaning is completed, it will be inspected by Embassy on-site representative.

d. Contractor may require using appropriately rated pump attached vehicle multiple times, until required level of cleaning is accomplished.

2.4 Contractor is required to submit necessary photos/video clips of before/while/after cleaning to the Contracting Officer's Representative ("COR") for record.

2.5 Prior to bringing the vehicles/trucks into the Embassy when scheduled, it should be tested off-site and ensure it is appropriately sized and in good working condition for the intended application.

2.6 It is the responsibility of the Contractor to dispose all waste water/sludge/grease laden settle-able and float-able solids from the effluent tanks/storm water drain pits/grease trap pits to the local authority authorized off-site location, at Contractor's cost.

## 3.0 SPECIFICATIONS OF THE SYSTEM

3.1 Sewage Tanks: There are two 30000 liter fiberglass anaerobic sewage pretreatment underground tanks. Each tank has two manway access. The overall dimensions of the tank are 24 feet length and 8 feet diameter. The manway access dimension is 22 inches diameter. Refer attached drawing in section 12.

3.2 Sewage Tank lifting station: The lifting station has dual Sewage Pumps and four numbers of rubber insulated Electric cable float switches. The dimension of the lifting station is 4.82meter depth and has a 80cm opening.

3.3 Kitchen Grease Trap: There is one 5000 liter concrete grease trap underground tank and has two manway access. The overall dimension are 19 feet length and 8.5 feet Height. The manway access dimension is 24 inches diameter. Refer attached drawing in section 12.

3.4 Storm Water Drain Manholes: There are twenty five (25) numbers of storm water drain manholes. The length of interconnecting pipes from one manhole to the other vary in the range of 35meters to 65meters. The pipes are made of Fiber Glass and its diameters are 12, 16 and 24inches. The depth of manholes vary from 0.85meter to 1.5meter and covered with 25 ¾" size square traffic duty grade metallic grill crate.

## 4.0 RESPONSIBILITY OF THE CONTRACTOR

4.1 The Contractor shall develop and submit for concurrence by the Embassy to implement the work plan, including quality control and safety aspects, to ensure that the services are performed to the satisfaction of COR and in accordance with local Municipality requirements.

4.2 The Contractor shall designate an English speaking representative who shall supervise the Contractor's workforce and be the Contractor's liaison with the Embassy.

4.3 The work shall be performed by personnel who is trained and experienced in handling of the sewage waste.

4.4 Work at site must be done according to an agreed phasing plan and the access limitations imposed for conduct of official business at the Embassy.

4.5 Work shall be scheduled during weekends or holidays once approved by the Embassy security office.

4.6 The Contractor requires to provide manifest / disposal document for our record for the collected disposable wastewater from sewage, kitchen grease trap, and storm water drain manholes.

4.7 It is the Contractor's responsibility to provide adequate personnel, proper tools and equipment not limited to sewage hauling trucks, pumping equipment, PPE, respiratory equipment, and hand tools to ensure efficient work performance and safe operation.

4.8 Contractor may require to utilize portable pumps and cleaning equipment for certain storm water drain manholes, as accessing by vehicle to all the manholes may not be possible for certain areas.

4.9 The Contractor requires to provide a Risk Assessment Plan prior to schedule the Cleaning work.

4.10 The Contractor shall ensure that all services are accomplished in accordance with the contract and all applicable laws and regulations. The Contractor shall be responsible for logistics and shall perform all related support functions.

4.11 The Contractor shall require to work with Abu Dhabi Municipality for a coordination, while performing the storm water drain manhole No. 2 which connects one of the Municipal parking lot's storm water drain headend, just outside the perimeter by CAC1. The Contractor shall use appropriate end caps/plug to perform the requested storm water drain manholes cleaning service.

4.12 Under no circumstances the contractor shall enter the anaerobic tanks, unless specifically receiving written approval by the Embassy Facility Manager and SHEM.

4.13 The Contractor should follow the safety instructions of the Embassy Safety Officer's guidelines. The works related to the Sewage tank, Sewage water lifting station and Grease trap should be done only in the presence of the Embassy Safety Officer.

## 5.0 SAFETY, HEALTH AND ENVIROMENTAL MANAGEMENT (SHEM)

5.1 The Contractor shall take all reasonable and proper safety precautions to prevent death or injury to any person or damage to any property at the Embassy Compound and in particular all equipment used by the Contractor shall be used in such a manner and maintained so as to minimize the danger of accident, death, injury, loss or damage arising from the use of such equipment. In addition to relevant statutory requirements, standards and other provisions of this Contract, the Contractor shall have the following requirements:

5.2 All electrical equipment and associated materials for the services contract comply with UL / local requirements.

5.3 Follow all NFPA guidelines against fire, protection of smoke or the venting of any noxious substances.

5.4 Ensure that the Contractor's personnel comply with all safety procedures and requirements. Under no circumstances the contractor shall enter Anaerobic or grease trap. As per 6 FAM 610 Chapter 10.1 and OBO/OM/SHEM, these two areas are classified as PERMISHEM spaces which require Post to obtain OBO/OM/SHEM approval for entry.

5.5 Ensure that the Contractor's personnel are adequately trained and instructed in the safe and correct usage, handling and operation of materials and equipment relevant to the services and provide reasonable proof of such to the Embassy on request.

5.6 Ensure the Contractor's personnel are certified as having completed occupational health and safety training and have been issued all the necessary Personal Protection Equipment (PPE)

required for safe implementation of this contract.

5.7 Training program(s) shall be presented and must satisfy the Embassy during the submittal process.

5.8 Guidelines - Confined Space Program

5.8.1 The Contractor shall comply with requirements of the Confined Space Program of the Office of Safety/Health and Environmental Management (SHEM) of Department of State (DOS) and all local requirements.

5.8.2 A confined space is a work location that is large enough and configured so that a person can bodily enter and perform assigned work, has limited and/or restricted openings for entry and that is not designed for continuous occupancy. Confined spaces pose unique health and safety hazards due to their contents, configurations and materials that are introduced during work tasks. The two major factors that lead to mishaps and fatal injuries in confined spaces are failure to recognize and control hazards prior to and during entry and inadequate or incorrect emergency response. A confined space management program must be in place to prevent unnecessary entry into such spaces and to assure that when entry is required that all protective measures are implemented to protect employees and contractors from hazardous conditions that may exist or be introduced during the particular work task.

5.8.3 The Confined Space Program document is attached to this Statement of Work for the Contractor's review and compliance.

5.8.4 Develop, submit for approval and maintain on site an action plan document for responding to accidents and emergencies. Guidelines available from SHEM shall be utilized for developing the action plan.

5.8.5 The Contractor shall bear complete responsibility for safe performance of work at site and comply with all local laws pertaining to construction labor and safety. In addition, the safety requirements relative to this SOW as contained in the USACE Manual EM 385-1-1 shall apply. In case of a conflict between the local laws and the requirements of EM 385-1-1, the stringent of the two shall apply. A soft copy of the USACE Manual EM 385-1-1 is available in the following link: http://www.publications.usace.army.mil/Portals/76/Publications/EngineerManuals/EM_385-1-1_English_2003.pdf

## 6.0 WORK SITE ADMINISTRATION

6.1 The Contractor shall designate a Site supervisor who shall be responsible for on-site supervision of the work at all times. The Supervisor shall be the point of contact for interaction with Embassy staff and shall have working level English language skills to be able to communicate orally and shall be able to follow written communication.

6.2 The work shall be performed by the personnel who should be trained and experienced in handling of the sewage, kitchen grease trap and storm water drain manholes waste.

6.3 The Contractor shall develop, submit for concurrence by Embassy and implement the work plan including quality control and safety aspects to ensure the services are performed to the satisfaction of COR and in accordance with local Municipality requirements

6.4 The Contractor shall maintain all contact with the Government through the Contracting Officer's Representative (COR) at the U.S. Embassy Abu Dhabi.

## 7.0 ACCESS TO GOVERNMENT BUILDINGS AND STANDARDS OF CONDUCT

7.1 The Contractor shall designate a representative who shall supervise the Contractor's technicians and be the Contractor's liaison with the Embassy. The Contractor's employees shall be on-site only for contractual duties and not for any other business or purposes. Contractor employees shall have access to the systems dedicated rooms with or without security escorts, only with specific permission by the Facility Manager, Contracting Officer, or the COR.

7.2 Personnel Security: The Embassy reserves the right to deny access to U.S.-owned and U.S.-operated facilities to any individual. The Contractor shall provide the names, biographic data and police clearance on all Contractor personnel, who shall be used on this contract prior to their utilization on this contract.

7.3 Standards of Conduct.

7.3.1 General: The Contractor shall maintain satisfactory standards of employee competency, conduct, cleanliness, appearance, and integrity and shall be responsible for taking such disciplinary action with respect to employees as necessary. Each Contractor employee shall adhere to standards of conduct that reflect credit on themselves, their employer, and the United States Government. The Embassy reserves the right to direct the Contractor to remove an employee from the worksite for failure to comply with the standards of conduct. The Contractor shall immediately replace such an employee to maintain continuity of services at no additional cost to the Government.

7.3.2 Uniforms and Personal Equipment. The Contractor's employees shall wear clean, neat and complete uniforms when on duty. The Contractor shall provide, to each employee and supervisor, uniforms and personal equipment. The Contractor shall be responsible for the cost of purchasing, cleaning, pressing, and repair of the uniforms.

7.3.3 Neglect of Duties. Neglect of duties shall not be condoned. This includes sleeping while on duty, unreasonable delays or failures to carry out assigned tasks, conducting personal affairs during duty hours and refusing to render assistance or cooperate in upholding the integrity of the worksite security.

7.3.4 Intoxicants and Narcotics. The Contractor shall not allow its employees while on duty to possess, sell, consume, or be under the influence of intoxicants, drugs or substances which produce similar effects.

## 8.0 PERSONNEL, TOOLS, MATERIALS AND SUPPLIES

8.1 The Contractor shall provide necessary trained competent personnel, tools, equipments, suction pumps, hoses and chemicals, materials and waste collection tank/trucks for performing the cleaning work as required by this contract.

## 9.0 INSURANCE REQUIREMENTS

9.1 Personal Injury, Property Loss or Damage (Liability). The Contractor assumes absolute responsibility and liability for any and all personal injuries or death and property damage or losses suffered due to negligence of the Contractor's personnel in the performance of this contract

9.1.1 The Contractor's assumption of absolute liability is independent of any insurance policies.

9.2 Insurance. The Contractor, at its own expense, shall provide and maintain during the entire period of performance of this contract, whatever insurance is legally necessary. The Contractor shall carry the following minimum insurance:

Comprehensive General Liability

| | |
|---|---|
| Bodily Injury | AED 1,500,000.00 |
| Property Damage | AED 1,500,000.00 |

General Liability (includes premises/operations, collapse hazard, products, completed operations, contractual, independent contractors, broad form property damage, personal injury). Bodily Injury stated in on or off the site stated in Dirhams and Property Damage on or off the site in Dirhams:

9.3 Worker's Compensation Insurance. The Contractor agrees to provide all employees with worker's compensation benefits as required by the laws of either the country in which the employees are working or the employee's native country, whichever offers greater benefits, following FAR 52.228-4 “Worker’s Compensation and War-Hazard Insurance Overseas”.

## 10.0 PERMITS

10.1 The Contractor shall maintain in full force and affect all permits, licenses, and appointments required for the prosecution of work under this contract at no additional cost to the Government. The Contractor shall obtain these permits, licenses, and appointments in compliance with host country laws.

## 11.0 LOCAL LAW REGISTRATION

11.1 If the local law or decree requires that one or both parties to the contract register the contract with the designated authorities to ensure compliance with this law or decree, the entire burden of this registration shall rest upon the Contractor. Any local or other taxes which may be assessed against the contract shall be payable by the Contractor without Government reimbursement.

## 12.0 GOVERNMENT FURNISHED PROPERTY/EQUIPMENT

12.1 The Government shall make the following property available to the Contractor as "Government furnished property" under the contract.

- Water (limited to basic use of cleaning but not for pressurized cleaning/flushing of storm water drain manholes/sewer collection tanks/grease trap)
- Electricity

The Contractor shall provide all equipment and materials required to perform the standard services as specified in this contract. Such items include, but are not limited to uniforms, personnel equipment, tools, cleaning supplies, fuel, using waste removal trucks, water tank trucks, pump equipment and any other operational or administrative items required for performance of the duties and requirements of this contract.

## 13.0 DELIVERABLES

The following items shall be delivered under this contract:

| DESCRIPTION | QUANTITY | DELIVERY DATE | DELIVER TO |
|---|---|---|---|
| DBA Insurance | 1 | 10 days after award | Contracting Officer |
| Cleaning program plan | 1 | 10 days after award | COR |
| List of personnel with details (required details will be provided on post award conference). | 1 | 10 days after award | COR |
| Documents required for security clearance | 1 | 10 days after award | COR |
| Payment request | 1 | Monthly | COR |

## 14.0 QUALITY ASSURANCE AND SURVEILLANCE PLAN (QASP)

14.1 Plan. This plan is designed to provide an effective surveillance method to promote effective Contractor performance. The QASP provides a method for the Contracting Officer's Representative (COR) to monitor Contractor performance, advise the Contractor of unsatisfactory performance, and notify the Contracting Officer of continued unsatisfactory performance. The Contractor, not the Government, is responsible for management and quality control to meet the terms of the contract. The role of the Government is to conduct quality assurance to ensure that contract standards are achieved.

| Performance Objective | PWS Para | Performance Threshold |
|---|---|---|
| **Services.**<br>Performs all storm water drain, grease trap and sewer collection tank cleaning services set forth in the performance work statement (PWS) | 1 thru 13 | All required services are performed and no more than one (1) customer complaint is received per month |

14.2 Surveillance. The COR will receive and document all complaints from Government personnel regarding the services provided. If appropriate, the COR will send the complaints to the Contractor for corrective action.

14.3 Standard. The performance standard is that the Government receives no more than one (1) customer complaint per month. The COR shall notify the Contracting Officer of the complaints so that the Contracting Officer may take appropriate action to enforce the inspection clause (FAR 52.212-4, Contract Terms and Conditions-Commercial Items), if any of the services exceed the standard.

14.4 Procedures.

14.4.1 If any Government personnel observe unacceptable services, either incomplete work or required services not being performed they should immediately contact the COR.

14.4.2 The COR will complete appropriate documentation to record the complaint.

14.4.3 If the COR determines the complaint is invalid, the COR will advise the complainant. The COR will retain the annotated copy of the written complaint for his/her files.

14.4.4 If the COR determines the complaint is valid, the COR will inform the Contractor and give the Contractor additional time to correct the defect, if additional time is available. The COR shall determine how much time is reasonable.

14.4.5 The COR shall, as a minimum, orally notify the Contractor of any valid complaints.

14.4.6 If the Contractor disagrees with the complaint after investigation of the site and challenges the validity of the complaint, the Contractor will notify the COR. The COR will review the matter to determine the validity of the complaint.

14.4.7 The COR will consider complaints as resolved unless notified otherwise by the complainant.

14.4.8 Repeat customer complaints are not permitted for any services. If a repeat customer complaint is received for the same deficiency during the service period, the COR will contact the Contracting Officer for appropriate action under the Inspection clause.

# ATTACHMENT 1

DRAWINGS

A. Schematic of Sewage Water tanks and Sewage Water lifting station. (attached below)
B. Sewage Tank Sectional drawing (attached below)
C. Plan and Section Drawing of Grease trap (attached below)
D. Layout of storm water drain manholes drawing (reserved).

Sewage system schematic.pdf

Sewage Tank sectional drawing.p

Plan & section of Grease Trap.pdf

## SECTION 2 - CONTRACT CLAUSES

FAR 52.212-4 CONTRACT TERMS AND CONDITIONS – COMMERICAL ITEMS (OCT 2018) and (DEVIATION 2017-02) (JUNE 2017, is incorporated by reference (see SF-1449, Block 27A)

**52.212-5 Contract Terms and Conditions Required to Implement Statutes or Executive Orders-Commercial Items (Jun 2020)**

(a) The Contractor shall comply with the following Federal Acquisition Regulation (FAR) clauses, which are incorporated in this contract by reference, to implement provisions of law or Executive orders applicable to acquisitions of commercial items:

(1) 52.203-19, Prohibition on Requiring Certain Internal Confidentiality Agreements or Statements (Jan 2017) (section 743 of Division E, Title VII, of the Consolidated and Further Continuing Appropriations Act, 2015 (Pub. L. 113-235) and its successor provisions in subsequent appropriations acts (and as extended in continuing resolutions)).

(2) 52.204-23, Prohibition on Contracting for Hardware, Software, and Services Developed or Provided by Kaspersky Lab and Other Covered Entities (Jul 2018) (Section 1634 of Pub. L. 115-91).

(3) 52.204-25, Prohibition on Contracting for Certain Telecommunications and Video Surveillance Services or Equipment. (Aug 2019) (Section 889(a)(1)(A) of Pub. L. 115-232).

(4) 52.209-10, Prohibition on Contracting with Inverted Domestic Corporations (Nov 2015).

(5) 52.233-3, Protest After Award (Aug 1996) (31 U.S.C. 3553).

(6) 52.233-4, Applicable Law for Breach of Contract Claim (Oct 2004) (Public Laws 108-77 and 108-78 (19 U.S.C. 3805note)).

(b) The Contractor shall comply with the FAR clauses in this paragraph (b) that the Contracting Officer has indicated as being incorporated in this contract by reference to implement provisions of law or Executive orders applicable to acquisitions of commercial items:

__ (1) 52.203-6, Restrictions on Subcontractor Sales to the Government (June 2020), with Alternate I (Oct 1995) (41 U.S.C. 4704 and 10 U.S.C. 2402).

__ (2) 52.203-13, Contractor Code of Business Ethics and Conduct (Jun 2020) (41 U.S.C. 3509)).

__ (3) 52.203-15, Whistleblower Protections under the American Recovery and Reinvestment Act of 2009 (Jun 2010) (Section 1553 of Pub. L. 111-5). (Applies to contracts funded by the American Recovery and Reinvestment Act of 2009.)

_X_ (4) 52.204-10, Reporting Executive Compensation and First-Tier Subcontract Awards (Jun 2020) (Pub. L. 109-282) (31 U.S.C. 6101 note).

__ (5) [Reserved].

__ (6) 52.204-14, Service Contract Reporting Requirements (Oct 2016) (Pub. L. 111-117, section 743 of Div. C).

__ (7) 52.204-15, Service Contract Reporting Requirements for Indefinite-Delivery Contracts (Oct 2016) (Pub. L. 111-117, section 743 of Div. C).

_X_ (8) 52.209-6, Protecting the Government's Interest When Subcontracting with Contractors Debarred, Suspended, or Proposed for Debarment. (Jun 2020) (31 U.S.C. 6101note).

__ (9) 52.209-9, Updates of Publicly Available Information Regarding Responsibility Matters (Oct 2018) (41 U.S.C. 2313).

__ (10) [Reserved].

__ (11)

(i) 52.219-3, Notice of HUBZone Set-Aside or Sole-Source Award (Mar 2020) (15 U.S.C.657a).

__ (ii) Alternate I (Mar 2020) of 52.219-3.

__ (12)

(i) 52.219-4, Notice of Price Evaluation Preference for HUBZone Small Business Concerns (Mar 2020) (if the offeror elects to waive the preference, it shall so indicate in its offer) (15 U.S.C. 657a).
__ (ii) Alternate I (Mar 2020) of 52.219-4.
__ (13) [Reserved]
__ (14)
(i) 52.219-6, Notice of Total Small Business Set-Aside (Mar 2020) (15 U.S.C.644).
__ (ii) Alternate I (Mar 2020).
__ (15)
(i) 52.219-7, Notice of Partial Small Business Set-Aside (Mar 2020) (15 U.S.C. 644).
__ (ii) Alternate I (Mar 2020) of 52.219-7.
__ (16) 52.219-8, Utilization of Small Business Concerns (Oct 2018) (15 U.S.C. 637(d)(2) and (3)).
__ (17)
(i) 52.219-9, Small Business Subcontracting Plan (Jun 2020) (15 U.S.C. 637(d)(4)).
__ (ii) Alternate I (Nov 2016) of 52.219-9.
__ (iii) Alternate II (Nov 2016) of 52.219-9.
__ (iv) Alternate III (Jun 2020) of 52.219-9.
__ (v) Alternate IV (Jun 2020) of 52.219-9.
__ (18) 52.219-13, Notice of Set-Aside of Orders (Mar 2020) (15 U.S.C. 644(r)).
__ (19) 52.219-14, Limitations on Subcontracting (Mar 2020) (15 U.S.C.637(a)(14)).
__ (20) 52.219-16, Liquidated Damages-Subcontracting Plan (Jan 1999) (15 U.S.C. 637(d)(4)(F)(i)).
__ (21) 52.219-27, Notice of Service-Disabled Veteran-Owned Small Business Set-Aside (Mar 2020) (15 U.S.C. 657f).
__ (22)
(i) 52.219-28, Post Award Small Business Program Rerepresentation (Mar 2020) (15 U.S.C. 632(a)(2)).
(ii) Alternate I (MAR 2020) of 52.219-28.
__ (23) 52.219-29, Notice of Set-Aside for, or Sole Source Award to, Economically Disadvantaged Women-Owned Small Business Concerns (Mar 2020) (15 U.S.C. 637(m)).
__ (24) 52.219-30, Notice of Set-Aside for, or Sole Source Award to, Women-Owned Small Business Concerns Eligible Under the Women-Owned Small Business Program (Mar 2020) (15 U.S.C. 637(m)).
__ (25) 52.219-32, Orders Issued Directly Under Small Business Reserves (Mar 2020) (15 U.S.C. 644(r)).
__ (26) 52.219-33, Nonmanufacturer Rule (Mar 2020) (15 U.S.C. 637(a)(17)).
__ (27) 52.222-3, Convict Labor (Jun 2003) (E.O.11755).
_X_ (28) 52.222-19, Child Labor-Cooperation with Authorities and Remedies (Jan 2020) (E.O.13126).
__ (29) 52.222-21, Prohibition of Segregated Facilities (Apr 2015).
__ (30)
(i) 52.222-26, Equal Opportunity (Sep 2016) (E.O.11246).
__ (ii) Alternate I (Feb 1999) of 52.222-26.
__ (31)
(i) 52.222-35, Equal Opportunity for Veterans (Jun 2020) (38 U.S.C. 4212).
__ (ii) Alternate I (Jul 2014) of 52.222-35.
__ (32)
(i) 52.222-36, Equal Opportunity for Workers with Disabilities (Jun 2020) (29 U.S.C.793).
__ (ii) Alternate I (Jul 2014) of 52.222-36.
_X_ (33) 52.222-37, Employment Reports on Veterans (Jun 2020) (38 U.S.C. 4212).
__ (34) 52.222-40, Notification of Employee Rights Under the National Labor Relations Act (Dec 2010) (E.O. 13496).
_X_ (35)

(i) 52.222-50, Combating Trafficking in Persons (Jan 2019) (22 U.S.C. chapter 78 and E.O. 13627).

__ (ii) Alternate I (Mar 2015) of 52.222-50 (22 U.S.C. chapter78 and E.O. 13627).

__ (36) 52.222-54, Employment Eligibility Verification (Oct 2015). (Executive Order 12989). (Not applicable to the acquisition of commercially available off-the-shelf items or certain other types of commercial items as prescribed in 22.1803.)

__ (37)
(i) 52.223-9, Estimate of Percentage of Recovered Material Content for EPA–Designated Items (May 2008) (42 U.S.C. 6962(c)(3)(A)(ii)). (Not applicable to the acquisition of commercially available off-the-shelf items.)

__ (ii) Alternate I (May 2008) of 52.223-9 (42 U.S.C. 6962(i)(2)(C)). (Not applicable to the acquisition of commercially available off-the-shelf items.)

__ (38) 52.223-11, Ozone-Depleting Substances and High Global Warming Potential Hydrofluorocarbons (Jun 2016) (E.O. 13693).

__ (39) 52.223-12, Maintenance, Service, Repair, or Disposal of Refrigeration Equipment and Air Conditioners (Jun 2016) (E.O. 13693).

__ (40)
(i) 52.223-13, Acquisition of EPEAT®-Registered Imaging Equipment (Jun 2014) (E.O.s 13423 and 13514).

__ (ii) Alternate I (Oct 2015) of 52.223-13.

__ (41)
(i) 52.223-14, Acquisition of EPEAT®-Registered Televisions (Jun 2014) (E.O.s 13423 and 13514).

__ (ii) Alternate I (Jun 2014) of 52.223-14.

__ (42) 52.223-15, Energy Efficiency in Energy-Consuming Products (Dec 2007) (42 U.S.C. 8259b).

__ (43)
(i) 52.223-16, Acquisition of EPEAT®-Registered Personal Computer Products (Oct 2015) (E.O.s 13423 and 13514).

__ (ii) Alternate I (Jun 2014) of 52.223-16.

_X_ (44) 52.223-18, Encouraging Contractor Policies to Ban Text Messaging While Driving (Jun 2020) (E.O. 13513).

__ (45) 52.223-20, Aerosols (Jun 2016) (E.O. 13693).

__ (46) 52.223-21, Foams (Jun 2016) (E.O. 13693).

__ (47)
(i) 52.224-3 Privacy Training (Jan 2017) (5 U.S.C. 552 a).

__ (ii) Alternate I (Jan 2017) of 52.224-3.

__ (48) 52.225-1, Buy American-Supplies (May 2014) (41 U.S.C. chapter 83).

__ (49)
(i) 52.225-3, Buy American-Free Trade Agreements-Israeli Trade Act (May 2014) (41 U.S.C. chapter 83, 19 U.S.C. 3301 note, 19 U.S.C. 2112 note, 19 U.S.C. 3805 note, 19 U.S.C. 4001 note, Pub. L. 103-182, 108-77, 108-78, 108-286, 108-302, 109-53, 109-169, 109-283, 110-138, 112-41, 112-42, and 112-43.

__ (ii) Alternate I (May 2014) of 52.225-3.

__ (iii) Alternate II (May 2014) of 52.225-3.

__ (iv) Alternate III (May 2014) of 52.225-3.

__ (50) 52.225-5, Trade Agreements (Oct 2019) (19 U.S.C. 2501, et seq., 19 U.S.C. 3301 note).

_X_ (51) 52.225-13, Restrictions on Certain Foreign Purchases (Jun 2008) (E.O.'s, proclamations, and statutes administered by the Office of Foreign Assets Control of the Department of the Treasury).

__ (52) 52.225-26, Contractors Performing Private Security Functions Outside the United States (Oct 2016) (Section 862, as amended, of the National Defense Authorization Act for Fiscal Year 2008; 10 U.S.C. 2302 Note).

__ (53) 52.226-4, Notice of Disaster or Emergency Area Set-Aside (Nov 2007) (42 U.S.C. 5150).

__ (54) 52.226-5, Restrictions on Subcontracting Outside Disaster or Emergency Area (Nov 2007) (42 U.S.C. 5150).

_X_ (55) 52.229-12, Tax on Certain Foreign Procurements (Jun 2020).

_X_ (56) 52.232-29, Terms for Financing of Purchases of Commercial Items (Feb 2002) (41 U.S.C.4505, 10 U.S.C.2307(f)).

_X_ (57) 52.232-30, Installment Payments for Commercial Items (Jan 2017) (41 U.S.C.4505, 10 U.S.C.2307(f)).

__ (58) 52.232-33, Payment by Electronic Funds Transfer-System for Award Management (Oct 2018) (31 U.S.C. 3332).

__ (59) 52.232-34, Payment by Electronic Funds Transfer-Other than System for Award Management (Jul 2013) (31 U.S.C.3332).

__ (60) 52.232-36, Payment by Third Party (May 2014) (31 U.S.C.3332).

__ (61) 52.239-1, Privacy or Security Safeguards (Aug 1996) (5 U.S.C. 552a).

__ (62) 52.242-5, Payments to Small Business Subcontractors (Jan 2017) (15 U.S.C. 637(d)(13)).

__ (63)

(i) 52.247-64, Preference for Privately Owned U.S.-Flag Commercial Vessels (Feb 2006) (46 U.S.C. Appx. 1241(b) and 10 U.S.C. 2631).

__ (ii) Alternate I (Apr 2003) of 52.247-64.

__ (iii) Alternate II (Feb 2006) of 52.247-64.

(c) The Contractor shall comply with the FAR clauses in this paragraph (c), applicable to commercial services, that the Contracting Officer has indicated as being incorporated in this contract by reference to implement provisions of law or Executive orders applicable to acquisitions of commercial items:

[Contracting Officer check as appropriate.]

__ (1) 52.222-41, Service Contract Labor Standards (Aug 2018) (41 U.S.C. chapter 67).

__ (2) 52.222-42, Statement of Equivalent Rates for Federal Hires (May 2014) (29 U.S.C. 206 and 41 U.S.C. chapter 67).

__ (3) 52.222-43, Fair Labor Standards Act and Service Contract Labor Standards-Price Adjustment (Multiple Year and Option Contracts) (Aug 2018) (29 U.S.C. 206 and 41 U.S.C. chapter 67).

__ (4) 52.222-44, Fair Labor Standards Act and Service Contract Labor Standards-Price Adjustment (May 2014) (29 U.S.C. 206 and 41 U.S.C. chapter 67).

__ (5) 52.222-51, Exemption from Application of the Service Contract Labor Standards to Contracts for Maintenance, Calibration, or Repair of Certain Equipment-Requirements (May 2014) (41 U.S.C. chapter 67).

__ (6) 52.222-53, Exemption from Application of the Service Contract Labor Standards to Contracts for Certain Services-Requirements (May 2014) (41 U.S.C. chapter 67).

__ (7) 52.222-55, Minimum Wages Under Executive Order 13658 (Dec 2015).

__ (8) 52.222-62, Paid Sick Leave Under Executive Order 13706 (Jan 2017) (E.O. 13706).

__ (9) 52.226-6, Promoting Excess Food Donation to Nonprofit Organizations (Jun 2020) (42 U.S.C. 1792).

(d) Comptroller General Examination of Record. The Contractor shall comply with the provisions of this paragraph (d) if this contract was awarded using other than sealed bid, is in excess of the simplified acquisition threshold, as defined in FAR 2.101, on the date of award of this contract, and does not contain the clause at 52.215-2, Audit and Records-Negotiation.

(1) The Comptroller General of the United States, or an authorized representative of the Comptroller General, shall have access to and right to examine any of the Contractor's directly pertinent records involving transactions related to this contract.

(2) The Contractor shall make available at its offices at all reasonable times the records, materials, and other evidence for examination, audit, or reproduction, until 3 years after final payment under this contract or for any shorter period specified in FAR subpart 4.7, Contractor

Records Retention, of the other clauses of this contract. If this contract is completely or partially terminated, the records relating to the work terminated shall be made available for 3 years after any resulting final termination settlement. Records relating to appeals under the disputes clause or to litigation or the settlement of claims arising under or relating to this contract shall be made available until such appeals, litigation, or claims are finally resolved.

(3) As used in this clause, records include books, documents, accounting procedures and practices, and other data, regardless of type and regardless of form. This does not require the Contractor to create or maintain any record that the Contractor does not maintain in the ordinary course of business or pursuant to a provision of law.

(e)

(1) Notwithstanding the requirements of the clauses in paragraphs (a), (b), (c), and (d) of this clause, the Contractor is not required to flow down any FAR clause, other than those in this paragraph (e)(1) in a subcontract for commercial items. Unless otherwise indicated below, the extent of the flow down shall be as required by the clause-

(i) 52.203-13, Contractor Code of Business Ethics and Conduct (Jun 2020) (41 U.S.C. 3509).

(ii) 52.203-19, Prohibition on Requiring Certain Internal Confidentiality Agreements or Statements (Jan 2017) (section 743 of Division E, Title VII, of the Consolidated and Further Continuing Appropriations Act, 2015 (Pub. L. 113-235) and its successor provisions in subsequent appropriations acts (and as extended in continuing resolutions)).

(iii) 52.204-23, Prohibition on Contracting for Hardware, Software, and Services Developed or Provided by Kaspersky Lab and Other Covered Entities (Jul 2018) (Section 1634 of Pub. L. 115-91).

(iv) 52.204-25, Prohibition on Contracting for Certain Telecommunications and Video Surveillance Services or Equipment. (Aug 2019) (Section 889(a)(1)(A) of Pub. L. 115-232).

(v) 52.219-8, Utilization of Small Business Concerns (Oct 2018) (15 U.S.C.637(d)(2) and (3)), in all subcontracts that offer further subcontracting opportunities. If the subcontract (except subcontracts to small business concerns) exceeds the applicable threshold specified in FAR 19.702(a) on the date of subcontract award, the subcontractor must include 52.219-8 in lower tier subcontracts that offer subcontracting opportunities.

(vi) 52.222-21, Prohibition of Segregated Facilities (Apr 2015).

(vii) 52.222-26, Equal Opportunity (Sep 2015) (E.O.11246).

(viii) 52.222-35, Equal Opportunity for Veterans (Jun 2020) (38 U.S.C.4212).

(ix) 52.222-36, Equal Opportunity for Workers with Disabilities (Jun 2020) (29 U.S.C.793).

(x) 52.222-37, Employment Reports on Veterans (Jun 2020) (38 U.S.C.4212).

(xi) 52.222-40, Notification of Employee Rights Under the National Labor Relations Act (Dec 2010) (E.O. 13496). Flow down required in accordance with paragraph (f) of FAR clause 52.222-40.

(xii) 52.222-41, Service Contract Labor Standards (Aug 2018) (41 U.S.C. chapter 67).

(xiii)

(A) 52.222-50, Combating Trafficking in Persons (Jan 2019) (22 U.S.C. chapter 78 and E.O 13627).

(B) Alternate I (Mar 2015) of 52.222-50(22 U.S.C. chapter 78 and E.O 13627).

(xiv) 52.222-51, Exemption from Application of the Service Contract Labor Standards to Contracts for Maintenance, Calibration, or Repair of Certain Equipment-Requirements (May 2014) (41 U.S.C. chapter 67).

(xv) 52.222-53, Exemption from Application of the Service Contract Labor Standards to Contracts for Certain Services-Requirements (May 2014) (41 U.S.C. chapter 67).

(xvi) 52.222-54, Employment Eligibility Verification (Oct 2015) (E.O. 12989).

(xvii) 52.222-55, Minimum Wages Under Executive Order 13658 (Dec 2015).

(xviii) 52.222-62, Paid Sick Leave Under Executive Order 13706 (Jan 2017) (E.O. 13706).

(xix)

(A) 52.224-3, Privacy Training (Jan 2017) (5 U.S.C. 552a).

(B) Alternate I (Jan 2017) of 52.224-3.

(xx) 52.225-26, Contractors Performing Private Security Functions Outside the United States (Oct 2016) (Section 862, as amended, of the National Defense Authorization Act for Fiscal Year 2008; 10 U.S.C. 2302 Note).

(xxi) 52.226-6, Promoting Excess Food Donation to Nonprofit Organizations (Jun 2020) (42 U.S.C. 1792). Flow down required in accordance with paragraph (e) of FAR clause 52.226-6.

(xxii) 52.247-64, Preference for Privately Owned U.S.-Flag Commercial Vessels (Feb 2006) (46 U.S.C. Appx.1241(b) and 10 U.S.C.2631). Flow down required in accordance with paragraph (d) of FAR clause 52.247-64.

(2) While not required, the Contractor may include in its subcontracts for commercial items a minimal number of additional clauses necessary to satisfy its contractual obligations.

(End of clause)

Add the following clause in full text:

52.229-12 Tax on Certain Foreign Procurements (JUN 2020)

(a) *Definitions.* As used in this clause—

*Foreign person* means any person other than a United States person.

*United States person,* as defined in 26 U.S.C. 7701(a)(30), means—

(1) A citizen or resident of the United States;

(2) A domestic partnership;

(3) A domestic corporation;

(4) Any estate (other than a foreign estate, within the meaning of 26 U.S.C. 7701(a)(31)); and

(5) Any trust if—

(i) A court within the United States is able to exercise primary supervision over the administration of the trust; and

(ii) One or more United States persons have the authority to control all substantial decisions of the trust.

(b) This clause applies only to foreign persons. It implements 26 U.S.C. 5000C and its implementing regulations at 26 CFR 1.5000C-1 through 1.5000C-7.

(c)(1) If the Contractor is a foreign person and has only a partial or no exemption to the withholding, the Contractor shall include the Department of the Treasury Internal Revenue Service Form W-14, Certificate of Foreign Contracting Party Receiving Federal Procurement Payments, with each voucher or invoice submitted under this contract throughout the period in which this status is applicable. The excise tax withholding is applied at the payment level, not at the contract level. The Contractor should revise each IRS Form W-14 submission to reflect the exemption (if any) that applies to that particular invoice, such as a different exemption applying.

In the absence of a completed IRS Form W-14 accompanying a payment request, the default withholding percentage is 2 percent for the section 5000C withholding for that payment request. Information about IRS Form W-14 and its separate instructions is available via the internet **at *www.irs.gov/w14***.

(2) If the Contractor is a foreign person and has indicated in its offer in the provision 52.229-11, Tax on Certain Foreign Procurements—Notice and Representation, that it is fully exempt from the withholding, and certified the full exemption on the IRS Form W-14, and if that full exemption no longer applies due to a change in circumstances during the performance of the contract that causes the Contractor to become subject to the withholding for the 2 percent excise tax then the Contractor shall—

(i) Notify the Contracting Officer within 30 days of a change in circumstances that causes the Contractor to be subject to the excise tax withholding under 26 U.S.C. 5000C; and

(ii) Comply with paragraph (c)(1) of this clause.

(d) The Government will withhold a full 2 percent of each payment unless the Contractor claims an exemption. If the Contractor enters a ratio in Line 12 of the IRS Form W-14, the result of Line 11 divided by Line 10, the Government will withhold from each payment an amount equal to 2 percent multiplied by the contract ratio. If the Contractor marks box 9 of the IRS Form W-14 (rather than completes Lines 10 through 12), 3ontractor must identify and enter the specific exempt and nonexempt amounts in Line 15 of the IRS Form W-14; the Government will then withhold 2 percent only from the nonexempt amount. See the IRS Form W-14 and its instructions.

(e) Exemptions from the withholding under this clause are described at 26 CFR 1.5000C-1(d)(5) through (7). Any exemption claimed and self-certified on the IRS Form W-14 is subject to audit by the IRS. Any disputes regarding the imposition and collection of the 26 U.S.C. 5000C tax are adjudicated by the IRS as the 26 U.S.C. 5000C tax is a tax matter, not a contract issue.

(f) Taxes imposed under 26 U.S.C. 5000C may not be—

(1) Included in the contract price; nor

(2) Reimbursed.

(g) A taxpayer may, for a fee, seek advice from the Internal Revenue Service (IRS) as to the proper tax treatment of a transaction. This is called a private letter ruling. Also, the IRS may publish a revenue ruling, which is an official interpretation by the IRS of the Internal Revenue Code, related statutes, tax treaties, and regulations. A revenue ruling is the conclusion of the IRS on how the law is applied to a specific set of facts. For questions relating to the interpretation of the IRS regulations go to ***https://www.irs.gov/help/tax-law-questions***.

(End of clause)

# ADDENDUM TO CONTRACT CLAUSES
# FAR AND DOSAR CLAUSES NOT PRESCRIBED IN PART 12

52.252-2 CLAUSES INCORPORATED BY REFERENCE (FEB 1998)

This contract incorporates one or more clauses by reference, with the same force and effect as if they were given in full text. Upon request, the Contracting Officer will make their full text available. In addition, the full text of a clause may be accessed electronically at: Acquisition.gov this address is subject to change.

If the Federal Acquisition Regulation (FAR) is not available at the location indicated above, use the Department of State Acquisition website at e-CFR to see the links to the FAR. You may also use an Internet "search engine" (for example, Google, Yahoo or Excite) to obtain the latest location of the most current FAR.

The following Federal Acquisition Regulation clauses are incorporated by reference:

| CLAUSE | TITLE AND DATE |
|---|---|
| 52.203-17 | CONTRACTOR EMPLOYEE WHISTLEBLOWER RIGHTS AND REQUIREMENT TO INFORM EMPLOYEES OF WHISTLEBLOWER RIGHTS (APR 2014) |
| 52.204-13 | SYSTEM FOR AWARD MANAGEMENT MAINTENANCE (OCT 2018) |
| 52.204-18 | COMMERCIAL AND GOVERNMENT ENTITY CODE MAINTENANCE (JUL 2016) |
| 52.225-14 | INCONSISTENCY BETWEEN ENGLISH VERSION AND TRANSLATION OF CONTRACT (FEB 2000) |
| 52.228-3 | WORKERS' COMPENSATION INSURANCE (Defense Base Act) (JUL 2014) |
| 52.228-5 | INSURANCE - WORK ON A GOVERNMENT INSTALLATION (JAN 1997) |
| 52.229-6 | FOREIGN FIXED PRICE CONTRACTS (FEB 2013) |
| 52.232-39 | UNENFORCEABILITY OF UNAUTHORIZED OBLIGATIONS (JUNE 2013) |
| 52.204-9 | PERSONAL IDENTITY VERIFICATION OF CONTRACTOR PERSONNEL (JAN 2011) |

The following FAR clauses are provided in full text:

52.217-8 OPTION TO EXTEND SERVICES (NOV 1999)

The Government may require continued performance of any services within the limits and at the rates specified in the contract. The option provision may be exercised more than once, but the total extension of performance hereunder shall not exceed 6 months. The Contracting Officer

may exercise the option by written notice to the Contractor within the performance period of the contract.

(End of clause)

52.217-9 OPTION TO EXTEND THE TERM OF THE CONTRACT (MAR 2000)

(a) The Government may extend the term of this contract by written notice to the Contractor within the performance period of the contract or within 30 days after funds for the option year become available, whichever is later.

(b) If the Government exercises this option, the extended contract shall be considered to include this option clause.

(c) The total duration of this contract, including the exercise of any options under this clause, shall not exceed 60 months.

(End of clause)

52.232-19 AVAILABILITY OF FUNDS FOR THE NEXT FISCAL YEAR (APR 1984)

Funds are not presently available for performance under this contract beyond September 30 of the current calendar year. The Government's obligation for performance of this contract beyond that date is contingent upon the availability of appropriated funds from which payment for contract purposes can be made. No legal liability on the part of the Government for any payment may arise for performance under this contract beyond September 30 of the current calendar year, until funds are made available to the Contracting Officer for performance and until the Contractor receives notice of availability, to be confirmed in writing by the Contracting Officer.

(End of clause)

The following DOSAR clauses are provided in full text:

CONTRACTOR IDENTIFICATION (JULY 2008)

Contract performance may require contractor personnel to attend meetings with government personnel and the public, work within government offices, and/or utilize government email.

Contractor personnel must take the following actions to identify themselves as non-federal employees:

1) Use an email signature block that shows name, the office being supported and company affiliation (e.g. “John Smith, Office of Human Resources, ACME Corporation Support Contractor”);

2) Clearly identify themselves and their contractor affiliation in meetings;

3) Identify their contractor affiliation in Departmental e-mail and phone listings whenever contractor personnel are included in those listings; and

4) Contractor personnel may not utilize Department of State logos or indicia on business cards.

(End of clause)

652.232-70 PAYMENT SCHEDULE AND INVOICE SUBMISSION (FIXED-PRICE) (AUG 1999)

(a) General. The Government shall pay the Contractor as full compensation for all work required, performed, and accepted under this contract the firm fixed-price stated in this contract.

(b) Invoice Submission. The contractor shall submit soft copy of the invoice(s) to the US Embassy Abu Dhabi Financial Management Center via email at USMissionUAEInvoices@state.gov in PDF or JPEG format. Hard copy invoices will not be accepted. To constitute a proper invoice, the invoice shall include all the items required by FAR 32.905(e).

The Contractor shall show Value Added Tax (VAT) as a separate item on invoices submitted for payment.

(c) Contractor Remittance Address. The Government will make payment to the contractor's address stated on the cover page of this contract, unless a separate remittance address is shown below:

(c) Contractor Remittance Address. The Government will make payment to the Contractor's address stated on the cover page of this contract, unless a separate remittance address is shown below:

| |
|---|
| |
| |

(End of clause)

**652.237-72 Observance of Legal Holidays and Administrative Leave (FEB 2015)**

(a) The Department of State observes the following days as holidays:

New Year's Day
Birthday of Martin Luther King, Jr.
Washington's Birthday
*Eid Al Fitr**
Memorial Day
Independence Day
*Arafat Day*
*Eid Al Adha**
*Hijri New Year**
Labor Day

Columbus Day
*Prophet's Birthday**
Veterans Day
Thanksgiving Day
Commemoration Day
National Day
Christmas Day

* Denotes UAE religious holidays. Dates for religious holidays are dependent upon the sighting of the moon and are likely to vary from the dates listed above. These local holidays will be determined and announced based upon the decision made by UAE Government authorities.

Any other day designated by Federal law, Executive Order, or Presidential Proclamation.

(b) When New Year's Day, Independence Day, Veterans Day or Christmas Day falls on a Sunday, the following Monday is observed; if it falls on Saturday the preceding Friday is observed. Observance of such days by Government personnel shall not be cause for additional period of performance or entitlement to compensation except as set forth in the contract. If the contractor's personnel work on a holiday, no form of holiday or other premium compensation will be reimbursed either as a direct or indirect cost, unless authorized pursuant to an overtime clause elsewhere in this contract.

(c) When the Department of State grants administrative leave to its Government employees, assigned contractor personnel in Government facilities shall also be dismissed. However, the contractor agrees to continue to provide sufficient personnel to perform round-the-clock requirements of critical tasks already in operation or scheduled, and shall be guided by the instructions issued by the contracting officer or his/her duly authorized representative.

(d) For fixed-price contracts, if services are not required or provided because the building is closed due to inclement weather, unanticipated holidays declared by the President, failure of Congress to appropriate funds, or similar reasons, deductions will be computed as follows:

(1) The deduction rate in dollars per day will be equal to the per month contract price divided by 21 days per month.

(2) The deduction rate in dollars per day will be multiplied by the number of days services are not required or provided.

If services are provided for portions of days, appropriate adjustment will be made by the contracting officer to ensure that the contractor is compensated for services provided.

(e) If administrative leave is granted to contractor personnel as a result of conditions stipulated in any "Excusable Delays" clause of this contract, it will be without loss to the contractor. The cost of salaries and wages to the contractor for the period of any such excused absence shall be a reimbursable item of direct cost hereunder for employees whose regular time is normally charged, and a reimbursable item of indirect cost for employees whose time is normally charged indirectly in accordance with the contractors accounting policy.

(End of clause)

652.242-70 CONTRACTING OFFICER'S REPRESENTATIVE (COR) AUG 1999)

(a) The Contracting Officer may designate in writing one or more Government employees, by name or position title, to take action for the Contracting Officer under this

contract. Each designee shall be identified as a Contracting Officer's Representative (COR). Such designation(s) shall specify the scope and limitations of the authority so delegated; provided, that the designee shall not change the terms or conditions of the contract, unless the COR is a warranted Contracting Officer and this authority is delegated in the designation.

(a) The COR for this contract is the ***Contracts Management Specialist.***

(End of clause)

652.242-73 AUTHORIZATION AND PERFORMANCE (AUG 1999)

(a) The Contractor warrants the following:

(1) That is has obtained authorization to operate and do business in the country or countries in which this contract will be performed;

(2) That is has obtained all necessary licenses and permits required to perform this contract; and,

(3) That it shall comply fully with all laws, decrees, labor standards, and regulations of said country or countries during the performance of this contract.

(b) If the party actually performing the work will be a subcontractor or joint venture partner, then such subcontractor or joint venture partner agrees to the requirements of paragraph (a) of this clause.

652.229-70 EXCISE TAX EXEMPTION STATEMENT FOR CONTRACTORS WITHIN THE UNITED STATES (JUL 1988)

This is to certify that the item(s) covered by this contract is/are for export solely for the use of the U.S. Foreign Service Post identified in the contract schedule.

The Contractor shall use a photocopy of this contract as evidence of intent to export. Final proof of exportation may be obtained from the agent handling the shipment. Such proof shall be accepted in lieu of payment of excise tax.

(End of clause)

## SECTION 3 - SOLICITATION PROVISIONS

Instructions to Offeror. Each offer must consist of the following:

FAR 52.212-1 INSTRUCTIONS TO OFFERORS -- COMMERCIAL ITEMS (JUN 2020), is incorporated by reference (see SF-1449, Block 27A)

1. A completed solicitation, in which the SF-1449 cover page (blocks 12, 17, 19-24, and 30 as appropriate), and Section 1 has been filled out.

2. Information demonstrating the offeror's ability to perform, including:

   (a) Name of the Project Manager assigned or other liaison to the Embassy who understands written and spoken English. Project Manager shall have minimum three years of managing sewer, storm water manholes and kitchen grease trap or similar cleaning services is preferred. Evidence shall be submitted.

   (b) Evidence that the offeror operates an established business with a permanent address and telephone listing;

3. List of clients over the past **three years**, demonstrating prior experience with relevant past performance information and references (provide dates of contracts, places of performance, value of contracts, contact names, telephone and fax numbers and email addresses). If the offeror has not performed comparable services in the United Arab Emirates, then the offeror shall provide its international experience. Offerors are advised that the past performance information requested above may be discussed with the client's contact person. In addition, the client's contact person may be asked to comment on the offeror's:

   - Quality of services provided under the contract;
   - Compliance with contract terms and conditions;
   - Effectiveness of management;
   - Willingness to cooperate with and assist the customer in routine matters, and when confronted by unexpected difficulties; and
   - Business integrity / business conduct.

   (a) Submit documents of past experience relevant to storm water drain system, Grease trap and sewer collection tanks. Pictures, service reports etc. shall be included.

The Government will use past performance information primarily to assess an offeror's capability to meet the solicitation performance requirements, including the relevance and successful performance of the offeror's work experience. The Government may also use this data to evaluate the credibility of the offeror's proposal. In addition, the Contracting Officer may use past performance information in making a determination of responsibility.

4. Evidence that the offeror/quoter can provide the necessary personnel, equipment, and financial resources needed to perform the work.

5. The offeror shall address its plan to obtain all licenses and permits required by local law (see DOSAR 652.242-73 in Section 2). If offeror already possesses the locally required licenses (Trade License, Certificate issued by the Chamber of Commerce etc.) and permits, a copy shall be provided authorizing the requested cleaning services.

6. The offeror shall submit a risk assessment plan specific to the requested services.

7. The offeror's strategic plan for the services to include but not limited to:

   (a) A work plan taking into account all work elements in Section 2 Work requirement.
   (b) Identify types and quantities of equipment, supplies and materials required for performance of services under this contract. Identify if the offeror already possesses the listed items and their condition for suitability and if not already possessed or inadequate for use how and when the items will be obtained.
   (c) Provide a statement that photos of before and after cleaning work of the storm water drain and grease trap will be provided.
   (d) Provide a statement that how will you clean the 24 inch size storm water drain pipes?
   (e) Provide a statement that how will you clean the longest – 58 metre length storm water drain interconnecting pipes?
   (f) Provide details/type and number of truck/s utilized for the service.
   (g) Provide action plan while cleaning the confined space entry rated storm water drain pits.
   (h) Provide list of PPEs that will be utilized during the work.
   (i) Provide list of proposed chemicals and its SDS that will be utilized during the work.
   (j) Specify how many days will take to complete each Storm water drain, grease trap and sewer system cleaning work?
   (k) Provide safety/emergency action plan for an unforeseen situation while performing the requested works.
   (l) Submit a method statement for the requested work.

8. Plan of ensuring quality of services including but not limited to contract administration and oversight; and (1) If insurance is required by the solicitation, a copy of the Certificate of Insurance(s), **or** (2) a statement that the Contractor will get the required insurance, and the name of the insurance provider to be used.

9. The offeror's audited Financial statement for the past three years shall be submitted.

The Offeror shall include Defense Base Act (DBA) insurance premium costs covering employees. The offeror may obtain DBA insurance directly from any Department of Labor approved providers at the DOL website at *http://www.dol.gov/owcp/dlhwc/lscarrier.htm*

# ADDENDUM TO SOLICITATION PROVISIONS
# FAR AND DOSAR PROVISIONS NOT PRESCRIBED IN PART 12

52.252-1 SOLICITATION PROVISIONS INCORPORATED BY REFERENCE (FEB 1998)

This solicitation incorporates one or more solicitation provisions by reference, with the same force and effect as if they were given in full text. Upon request, the Contracting Officer will make their full text available. In addition, the full text of a clause may be accessed electronically at Acquisition.gov this address is subject to change.

If the Federal Acquisition Regulation (FAR) is not available at the location indicated above, use the Department of State Acquisition website at e-CFR to see the links to the FAR. You may also use an Internet "search engine" (for example, Google, Yahoo or Excite) to obtain the latest location of the most current FAR.

The following Federal Acquisition Regulation solicitation provisions are incorporated by reference:

| PROVISION | TITLE AND DATE |
|---|---|
| 52.204-7 | SYSTEM FOR AWARD MANAGEMENT (OCT 2018) |
| 52.204-16 | COMMERCIAL AND GOVERNMENT ENTITY CODE REPORTING (JUL 2016) |
| 52.237-1 | SITE VISIT (APR 1984) |

The Government will hold a pre-quotation conference to discuss the requirements of this solicitation on **July 20, 2020 at 10:00 a.m.** at the U.S. Embassy.

NOTE TO INTERESTED VENDORS* - Due to security concerns requirements all vendors who plan on attending the site visit/ pre-quotation conference must contact Abu Dhabi Contracts via email at AbuDhabiContracts@state.gov (Telephone: +971-414-2269) in order to provide the names of all individuals who will attend as well as the name of the company they represent. The information must be provided on the attached Site Visit Access Request form no later than **10:00 a.m. on July 16, 2020**.

- Name (Last, First)
- Nationality
- ID number (Passport or Emirates ID or Driver's license)
- Company Name
- Contact number:

On the date of the conference, all company representatives who have provided notification they will attend must present matching photo identification in order to be allowed access. Anyone attempting to attend the pre-quotation conference without the requested prior notification will be denied entry.

Offerors should submit written questions using Standard Form 1449 and deliver this information to the Contracting Officer at AbuDhabiContracts@state.gov at least three days prior to the scheduled pre-quotation conference date. Attendees may also bring written questions on the day of the pre-quotation conference. Please note if any answers require research, there is no guarantee that the question will be answered on the day of the conference.

No statements made by the Government at the pre-quotation conference shall be considered to be a change to the solicitation unless a written amendment is issued.

Following the conference, the Government will provide all prospective offerors who received a copy of the solicitation, with a copy of all questions presented in writing before the conference, along with answers. If the answer requires a change to the solicitation, the Government will issue a solicitation amendment and the quotation due date may be extended, if necessary.
The following DOSAR provision(s) is/are provided in full text:

The following DOSAR provision(s) is/are provided in full text:
652.206-70 ADVOCATE FOR COMPETITION/OMBUDSMAN (FEB 2015)

(a) The Department of State's Advocate for Competition is responsible for assisting industry in removing restrictive requirements from Department of State solicitations and removing barriers to full and open competition and use of commercial items. If such a solicitation is considered competitively restrictive or does not appear properly conducive to competition and commercial practices, potential offerors are encouraged first to contact the contracting office for the solicitation. If concerns remain unresolved, contact:

(1) For solicitations issued by the Office of Acquisition Management (A/LM/AQM) or a Regional Procurement Support Office, the A/LM/AQM Advocate for Competition, at AQMCompetitionAdvocate@state.gov.

(2) For all others, the Department of State Advocate for Competition at cat@state.gov.

(b) The Department of State's Acquisition Ombudsman has been appointed to hear concerns from potential offerors and contractors during the pre-award and post-award phases of this acquisition. The role of the ombudsman is not to diminish the authority of the contracting officer, the Technical Evaluation Panel or Source Evaluation Board, or the selection official. The purpose of the ombudsman is to facilitate the communication of concerns, issues, disagreements, and recommendations of interested parties to the appropriate Government personnel, and work to resolve them. When requested and appropriate, the ombudsman will maintain strict confidentiality as to the source of the concern. The ombudsman does not participate in the evaluation of proposals, the source selection process, or the adjudication of formal contract disputes. Interested parties are invited to contact the contracting activity ombudsman, the Management Counselor at telephone +971-2-414-2613 or fax number +971-2-414-2575. For an American Embassy or overseas post, refer to the numbers below for the Department Acquisition Ombudsman. Concerns, issues, disagreements, and recommendations which cannot be resolved at a contracting activity level may be referred to the Department of State Acquisition Ombudsman at (703) 516-1696 or write to: Department of State, Acquisition Ombudsman, Office of the Procurement Executive (A/OPE), Suite 1060, SA-15, Washington, DC 20520.

(End of provision)

## SECTION 4 - EVALUATION FACTORS

- Award will be made to the lowest priced, acceptable, responsible offeror. The quoter shall submit a completed solicitation, including Sections 1 and 5.

- The Government reserves the right to reject proposals that are unreasonably low or high in price.

- The lowest price will be determined by multiplying the offered prices times the estimated quantities in "Prices - Continuation of SF-1449, block 23", and arriving at a grand total, including all options.

- The Government will determine acceptability by assessing the offeror's compliance with the terms of the RFQ **to include the technical information required by Section 3.**

- The Government will determine contractor responsibility by analyzing whether the apparent successful offeror complies with the requirements of FAR 9.1, including:

    - Adequate financial resources or the ability to obtain them;
    - Ability to comply with the required performance period, taking into consideration all existing commercial and governmental business commitments;
    - Satisfactory record of integrity and business ethics;
    - Necessary organization, experience, and skills or the ability to obtain them;
    - Necessary equipment and facilities or the ability to obtain them; and
    - Be otherwise qualified and eligible to receive an award under applicable laws and regulations.

ADDENDUM TO EVALUATION FACTORS
FAR AND DOSAR PROVISION(S) NOT PRESCRIBED IN PART 12

The following FAR provision(s) is/are provided in full text:

52.217-5 EVALUATION OF OPTIONS (JUL 1990)

The Government will evaluate offers for award purposes by adding the total price for all options to the total price for the basic requirement. Evaluation of options will not obligate the Government to exercise the option(s).

**52.212-3 Offeror Representations and Certifications-Commercial Items (Jun 2020)**

The Offeror shall complete only paragraph (b) of this provision if the Offeror has completed the annual representations and certification electronically in the System for Award Management (SAM) accessed through https://www.sam.gov. If the Offeror has not completed the annual representations and certifications electronically, the Offeror shall complete only paragraphs (c) through (v)) of this provision.

(a) Definitions. As used in this provision—

"Covered telecommunications equipment or services" has the meaning provided in the clause 52.204-25, Prohibition on Contracting for Certain Telecommunications and Video Surveillance Services or Equipment.

Economically disadvantaged women-owned small business (EDWOSB) concern means a small business concern that is at least 51 percent directly and unconditionally owned by, and the management and daily business operations of which are controlled by, one or more women who are citizens of the United States and who are economically disadvantaged in accordance with 13 CFR part 127. It automatically qualifies as a women-owned small business eligible under the WOSB Program.

Forced or indentured child labor means all work or service—

(1) Exacted from any person under the age of 18 under the menace of any penalty for its nonperformance and for which the worker does not offer himself voluntarily; or

(2) Performed by any person under the age of 18 pursuant to a contract the enforcement of which can be accomplished by process or penalties.

Highest-level owner means the entity that owns or controls an immediate owner of the offeror, or that owns or controls one or more entities that control an immediate owner of the offeror. No entity owns or exercises control of the highest level owner.

Immediate owner means an entity, other than the offeror, that has direct control of the offeror. Indicators of control include, but are not limited to, one or more of the following: ownership or interlocking management, identity of interests among family members, shared facilities and equipment, and the common use of employees.

Inverted domestic corporation, means a foreign incorporated entity that meets the definition of an inverted domestic corporation under 6 U.S.C. 395(b), applied in accordance with the rules and definitions of 6 U.S.C. 395(c).

Manufactured end product means any end product in product and service codes (PSCs) 1000-9999, except—

(1) PSC 5510, Lumber and Related Basic Wood Materials;
(2) Product or Service Group (PSG) 87, Agricultural Supplies;
(3) PSG 88, Live Animals;
(4) PSG 89, Subsistence;
(5) PSC 9410, Crude Grades of Plant Materials;
(6) PSC 9430, Miscellaneous Crude Animal Products, Inedible;
(7) PSC 9440, Miscellaneous Crude Agricultural and Forestry Products;
(8) PSC 9610, Ores;

(9) PSC 9620, Minerals, Natural and Synthetic; and

(10) PSC 9630, Additive Metal Materials.

Place of manufacture means the place where an end product is assembled out of components, or otherwise made or processed from raw materials into the finished product that is to be provided to the Government. If a product is disassembled and reassembled, the place of reassembly is not the place of manufacture.

Predecessor means an entity that is replaced by a successor and includes any predecessors of the predecessor.

Restricted business operations means business operations in Sudan that include power production activities, mineral extraction activities, oil-related activities, or the production of military equipment, as those terms are defined in the Sudan Accountability and Divestment Act of 2007 (Pub. L. 110-174). Restricted business operations do not include business operations that the person (as that term is defined in Section 2 of the Sudan Accountability and Divestment Act of 2007) conducting the business can demonstrate—

(1) Are conducted under contract directly and exclusively with the regional government of southern Sudan;

(2) Are conducted pursuant to specific authorization from the Office of Foreign Assets Control in the Department of the Treasury, or are expressly exempted under Federal law from the requirement to be conducted under such authorization;

(3) Consist of providing goods or services to marginalized populations of Sudan;

(4) Consist of providing goods or services to an internationally recognized peacekeeping force or humanitarian organization;

(5) Consist of providing goods or services that are used only to promote health or education; or

(6) Have been voluntarily suspended.“Sensitive technology”—

Sensitive technology—

(1) Means hardware, software, telecommunications equipment, or any other technology that is to be used specifically—

(i) To restrict the free flow of unbiased information in Iran; or

(ii) To disrupt, monitor, or otherwise restrict speech of the people of Iran; and

(2) Does not include information or informational materials the export of which the President does not have the authority to regulate or prohibit pursuant to section 203(b)(3)of the International Emergency Economic Powers Act (50 U.S.C. 1702(b)(3)).

Service-disabled veteran-owned small business concern—

(1) Means a small business concern—

(i) Not less than 51 percent of which is owned by one or more service-disabled veterans or, in the case of any publicly owned business, not less than 51 percent of the stock of which is owned by one or more service-disabled veterans; and

(ii) The management and daily business operations of which are controlled by one or more service-disabled veteransor, in the case of a service-disabled veteran with permanent and severe disability, the spouse or permanent caregiver of such veteran.

(2) Service-disabled veteran means a veteran, as defined in 38 U.S.C. 101(2), with a disability that is service connected, as defined in 38 U.S.C. 101(16).

Small business concern means a concern, including its affiliates, that is independently owned and operated, not dominant in the field of operation in which it is bidding on Government contracts, and qualified as a small business under the criteria in 13 CFR Part 121 and size standards in this solicitation.

Small disadvantaged business concern, consistent with13 CFR 124.1002, means a small business concern under the size standard applicable to the acquisition, that—

(1) Is at least 51 percent unconditionally and directly owned (as defined at 13 CFR 124.105) by—

(i) One or more socially disadvantaged (as defined at13 CFR 124.103) and economically disadvantaged (as defined at 13 CFR 124.104) individuals who are citizens of the United States; and

(ii) Each individual claiming economic disadvantage has a net worth not exceeding $750,000 after taking into account the applicable exclusions set forth at 13 CFR124.104(c)(2); and

(2) The management and daily business operations of which are controlled (as defined at 13.CFR 124.106) by individuals, who meet the criteria in paragraphs (1)(i) and (ii) of this definition.

Subsidiary means an entity in which more than 50 percent of the entity is owned—

(1) Directly by a parent corporation; or

(2) Through another subsidiary of a parent corporation

Successor means an entity that has replaced a predecessor by acquiring the assets and carrying out the affairs of the predecessor under a new name (often through acquisition or merger). The term "successor" does not include new offices/divisions of the same company or a company that only changes its name. The extent of the responsibility of the successor for the liabilities of the predecessor may vary, depending on State law and specific circumstances.

Veteran-owned small business concern means a small business concern—

(1) Not less than 51 percent of which is owned by one or more veterans (as defined at 38 U.S.C. 101(2)) or, in the case of any publicly owned business, not less than 51 percent of the stock of which is owned by one or more veterans; and

(2) The management and daily business operations of which are controlled by one or more veterans.

Women-owned small business (WOSB) concern eligible under the WOSB Program (in accordance with 13 CFR part 127), means a small business concern that is at least 51 percent directly and unconditionally owned by, and the management and daily business operations of which are controlled by, one or more women who are citizens of the United States.

Women-owned small business concern means a small business concern—

(1) That is at least 51 percent owned by one or more women; or, in the case of any publicly owned business, at least51 percent of the stock of which is owned by one or more women; and

(2) Whose management and daily business operations are controlled by one or more women.

(b)

(1) Annual Representations and Certifications. Any changes provided by the Offeror in paragraph (b)(2) of this provision do not automatically change the representations and certifications in SAM

(2) The offeror has completed the annual representations and certifications electronically in SAM accessed through http://www.sam.gov. After reviewing SAM information, the Offeror verifies by submission of this offer that the representations and certifications currently posted electronically at FAR 52.212-3, Offeror Representations and Certifications-Commercial Items, have been entered or updated in the last 12 months, are current, accurate, complete, and applicable to this solicitation (including the business size standard(s) applicable to the NAICS code(s) referenced for this solicitation), at the time this offer is submitted and are incorporated in this offer by reference (see FAR 4.1201), except for paragraphs _____.

[Offeror to identify the applicable paragraphs at (c) through (v) of this provision that the offeror has completed for the purposes of this solicitation only, if any.

These amended representation(s) and/or certification(s) are also incorporated in this offer and are current, accurate, and complete as of the date of this offer.

Any changes provided by the offeror are applicable to this solicitation only, and do not result in an update to the representations and certifications posted electronically on SAM.]

(c) Offerors must complete the following representations when the resulting contract will be performed in the United States or its outlying areas. Check all that apply.

(1) Small business concern. The offeror represents as part of its offer that it □ is, □ is not a small business concern.

(2) Veteran-owned small business concern. [Complete only if the offeror represented itself as a small business concern in paragraph (c)(1) of this provision.] The offeror represents as part of its offer that it □ is, □ is not a veteran-owned small business concern.

(3) Service-disabled veteran-owned small business concern. [Complete only if the offeror represented itself as a veteran-owned small business concern in paragraph (c)(2) of this provision.]

The offeror represents as part of its offer that it □ is, □ is not a service-disabled veteran-owned small business concern.

(4) Small disadvantaged business concern. [Complete only if the offeror represented itself as a small business concern in paragraph (c)(1) of this provision.] The offeror represents, that it □ is, □ is not a small disadvantaged business concern as defined in 13 CFR124.1002.

(5) Women-owned small business concern. [Complete only if the offeror represented itself as a small business concern in paragraph (c)(1) of this provision.] The offeror represents that it □ is, □ is not a women-owned small business concern.

(6) WOSB concern eligible under the WOSB Program. [Complete only if the offeror represented itself as a women-owned small business concern in paragraph (c)(5) of this provision.] The offeror represents that-

(i) It □ is, □ is not a WOSB concern eligible under the WOSB Program, has provided all the required documents to the WOSB Repository, and no change in circumstances or adverse decisions have been issued that affects its eligibility; and

(ii) It □ is, □ is not a joint venture that complies with the requirements of 13 CFR part 127, and the representation in paragraph (c)(6)(i) of this provision is accurate for each WOSB concern eligible under the WOSB Program participating in the joint venture. [The offeror shall enter the name or names of the WOSB concern eligible under the WOSB Program and other small businesses that are participating in the joint venture: _____.] Each WOSB concern eligible under the WOSB Program participating in the joint venture shall submit a separate signed copy of the WOSB representation.

(7) Economically disadvantaged women-owned small business (EDWOSB) concern. [Complete only if the offeror represented itself as a WOSB concern eligible under the WOSB Program in (c)(6) of this provision.] The offeror represents that-

(i) It □ is, □ is not an EDWOSB concern, has provided all the required documents to the WOSB Repository, and no change in circumstances or adverse decisions have been issued that affects its eligibility; and

(ii) It □ is, □ is not a joint venture that complies with the requirements of 13 CFR part 127, and the representation in paragraph (c)(7)(i) of this provision is accurate for each EDWOSB concern participating in the joint venture. [The offeror shall enter the name or names of the EDWOSB concern and other small businesses that are participating in the joint venture: _____.] Each EDWOSB concern participating in the joint venture shall submit a separate signed copy of the EDWOSB representation.

Note: Complete paragraphs (c)(8) and (c)(9) only if this solicitation is expected to exceed the simplified acquisition threshold.

(8) Women-owned business concern (other than small business concern). [Complete only if the offeror is a women-owned business concern and did not represent itself as a small business concern in paragraph (c)(1) of this provision.] The offeror represents that it □ is a women-owned business concern.

(9) Tie bid priority for labor surplus area concerns. If this is an invitation for bid, small business offerors may identify the labor surplus areas in which costs to be incurred on account of manufacturing or production (by offeror or first-tier subcontractors) amount to more than 50 percent of the contract price:_____

(10) HUBZone small business concern. [Complete only if the offeror represented itself as a small business concern in paragraph (c)(1) of this provision.] The offeror represents, as part of its offer, that–

(i) It □ is, □ is not a HUBZone small business concern listed, on the date of this representation, on the List of Qualified HUBZone Small Business Concerns maintained by the Small Business Administration, and no material changes in ownership and control, principal office, or HUBZone employee percentage have occurred since it was certified in accordance with 13 CFR Part 126; and

(ii) It □ is, □ is not a HUBZone joint venture that complies with the requirements of 13 CFR Part 126, and the representation in paragraph (c)(10)(i) of this provision is accurate for each HUBZone small business concern participating in the HUBZone joint venture. [The offeror shall

enter the names of each of the HUBZone small business concerns participating in the HUBZone joint venture: _____.] Each HUBZone small business concern participating in the HUBZone joint venture shall submit a separate signed copy of the HUBZone representation.

(d) Representations required to implement provisions of Executive Order11246-

(1) Previous contracts and compliance. The offeror represents that-

(i) It □ has, □ has not participated in a previous contract or subcontract subject to the Equal Opportunity clause of this solicitation; and

(ii) It □ has, □ has not filed all required compliance reports.

(2) Affirmative Action Compliance. The offeror represents that-

(i) It □ has developed and has on file, □ has not developed and does not have on file, at each establishment, affirmative action programs required by rules and regulations of the Secretary of Labor (41 CFR parts 60-1 and 60-2), or

(ii) It □ has not previously had contracts subject to the written affirmative action programs requirement of the rules and regulations of the Secretary of Labor.

(e) Certification Regarding Payments to Influence Federal Transactions (31 http://uscode.house.gov/ U.S.C. 1352). (Applies only if the contract is expected to exceed $150,000.) By submission of its offer, the offeror certifies to the best of its knowledge and belief that no Federal appropriated funds have been paid or will be paid to any person for influencing or attempting to influence an officer or employee of any agency, a Member of Congress, an officer or employee of Congress or an employee of a Member of Congress on his or her behalf in connection with the award of any resultant contract. If any registrants under the Lobbying Disclosure Act of 1995 have made a lobbying contact on behalf of the offeror with respect to this contract, the offeror shall complete and submit, with its offer, OMB Standard Form LLL, Disclosure of Lobbying Activities, to provide the name of the registrants. The offeror need not report regularly employed officers or employees of the offeror to whom payments of reasonable compensation were made.

(f) Buy American Certificate. (Applies only if the clause at Federal Acquisition Regulation (FAR) 52.225-1, Buy American-Supplies, is included in this solicitation.)

(1) The offeror certifies that each end product, except those listed in paragraph (f)(2) of this provision, is a domestic end product and that for other than COTS items, the offeror has considered components of unknown origin to have been mined, produced, or manufactured outside the United States. The offeror shall list as foreign end products those end products manufactured in the United States that do not qualify as domestic end products,i.e., an end product that is not a COTS item and does not meet the component test in paragraph (2) of the definition of "domestic end product." The terms "commercially available off-the-shelf (COTS) item" "component," "domestic end product," "end product," "foreign end product," and "United States" are defined in the clause of this solicitation entitled "Buy American-Supplies."

(2) Foreign End Products:

| Line Item No. | Country of Origin |
|---|---|
| _____ | _____ |
| _____ | _____ |
| _____ | _____ |

[List as necessary]

(3) The Government will evaluate offers in accordance with the policies and procedures of FAR part 25.

(g)

(1) Buy American-Free Trade Agreements-Israeli Trade Act Certificate. (Applies only if the clause at FAR 52.225-3, Buy American-Free Trade Agreements-Israeli Trade Act, is included in this solicitation.)

(i) The offeror certifies that each end product, except those listed in paragraph (g)(1)(ii) or (g)(1)(iii) of this provision, is a domestic end product and that for other than COTS items, the offeror has considered components of unknown origin to have been mined, produced, or

manufactured outside the United States. The terms "Bahrainian, Moroccan, Omani, Panamanian, or Peruvian end product," "commercially available off-the-shelf (COTS) item," "component," "domestic end product," "end product," "foreign end product," "Free Trade Agreement country," "Free Trade Agreement country end product," "Israeli end product," and "United States" are defined in the clause of this solicitation entitled "Buy American-Free Trade Agreements–Israeli Trade Act."

(ii) The offeror certifies that the following supplies are Free Trade Agreement country end products (other than Bahrainian, Moroccan, Omani, Panamanian, or Peruvian end products) or Israeli end products as defined in the clause of this solicitation entitled "Buy American-Free Trade Agreements-Israeli Trade Act":

Free Trade Agreement Country End Products (Other than Bahrainian, Moroccan, Omani, Panamanian, or Peruvian End Products) or Israeli End Products:

| Line Item No. | Country of Origin |
|---|---|
| _____ | _____ |
| _____ | _____ |
| _____ | _____ |

[List as necessary]

(iii) The offeror shall list those supplies that are foreign end products (other than those listed in paragraph (g)(1)(ii) of this provision) as defined in the clause of this solicitation entitled "Buy American-Free Trade Agreements-Israeli Trade Act." The offeror shall list as other foreign end products those end products manufactured in the United States that do not qualify as domestic end products, i.e., an end product that is not a COTS item and does not meet the component test in paragraph (2) of the definition of "domestic end product."

Other Foreign End Products:

| Line Item No. | Country of Origin |
|---|---|
| _____ | _____ |
| _____ | _____ |
| _____ | _____ |

[List as necessary]

(iv) The Government will evaluate offers in accordance with the policies and procedures of FAR part 25.

(2) Buy American-Free Trade Agreements-Israeli Trade Act Certificate, Alternate I. If Alternate I to the clause at FAR 52.225-3 is included in this solicitation, substitute the following paragraph (g)(1)(ii) for paragraph (g)(1)(ii) of the basic provision:

(g)(1)(ii) The offeror certifies that the following supplies are Canadian end products as defined in the clause of this solicitation entitled "Buy American-Free Trade Agreements-Israeli Trade Act":

Canadian End Products:

| Line Item No. |
|---|
| _____ |
| _____ |
| _____ |

[List as necessary]

(3) Buy American-Free Trade Agreements-Israeli Trade Act Certificate, Alternate II. If Alternate II to the clause at FAR 52.225-3 is included in this solicitation, substitute the following paragraph (g)(1)(ii) for paragraph (g)(1)(ii) of the basic provision:

(g)(1)(ii) The offeror certifies that the following supplies are Canadian end products or Israeli end products as defined in the clause of this solicitation entitled "Buy American-Free Trade Agreements-Israeli Trade Act":

Canadian or Israeli End Products:

| Line Item No. | Country of Origin |
|---|---|
| _____ | _____ |
| _____ | _____ |
| _____ | _____ |

[List as necessary]

(4) Buy American-Free Trade Agreements-Israeli Trade Act Certificate, Alternate III. If Alternate III to the clause at 52.225-3 is included in this solicitation, substitute the following paragraph (g)(1)(ii) for paragraph (g)(1)(ii) of the basic provision:

(g)(1)(ii) The offeror certifies that the following supplies are Free Trade Agreement country end products (other than Bahrainian, Korean, Moroccan, Omani, Panamanian, or Peruvian end products) or Israeli end products as defined in the clause of this solicitation entitled "Buy American-Free Trade Agreements-Israeli Trade Act":

Free Trade Agreement Country End Products (Other than Bahrainian, Korean, Moroccan, Omani, Panamanian, or Peruvian End Products) or Israeli End Products:

| Line Item No. | Country of Origin |
|---|---|
| _____ | _____ |
| _____ | _____ |
| _____ | _____ |

[List as necessary]

(5) Trade Agreements Certificate. (Applies only if the clause at FAR 52.225-5, Trade Agreements, is included in this solicitation.)

(i) The offeror certifies that each end product, except those listed in paragraph (g)(5)(ii) of this provision, is a U.S.-made or designated country end product, as defined in the clause of this solicitation entitled "Trade Agreements."

(ii) The offeror shall list as other end products those end products that are not U.S.-made or designated country end products.

Other End Products:

| Line Item No. | Country of Origin |
|---|---|
| _____ | _____ |
| _____ | _____ |
| _____ | _____ |

[List as necessary]

(iii) The Government will evaluate offers in accordance with the policies and procedures of FAR part 25. For line items covered by the WTO GPA, the Government will evaluate offers of U.S.-made or designated country end products without regard to the restrictions of the Buy American statute. The Government will consider for award only offers of U.S.-made or designated country end products unless the Contracting Officer determines that there are no offers for such products or that the offers for such products are insufficient to fulfill the requirements of the solicitation.

(h) Certification Regarding Responsibility Matters (Executive Order 12689). (Applies only if the contract value is expected to exceed the simplified acquisition threshold.) The offeror certifies, to the best of its knowledge and belief, that the offeror and/or any of its principals–

(1) □ Are, □ are not presently debarred, suspended, proposed for debarment, or declared ineligible for the award of contracts by any Federal agency;

(2) □ Have, □ have not, within a three-year period preceding this offer, been convicted of or had a civil judgment rendered against them for: commission of fraud or a criminal offense in connection with obtaining, attempting to obtain, or performing a Federal, state or local government contract or subcontract; violation of Federal or state antitrust statutes relating to the submission of offers; or commission of embezzlement, theft, forgery, bribery, falsification or destruction of

records, making false statements, tax evasion, violating Federal criminal tax laws, or receiving stolen property;

(3) □ Are, □ are not presently indicted for, or otherwise criminally or civilly charged by a Government entity with, commission of any of these offenses enumerated in paragraph (h)(2) of this clause; and

(4) □ Have, □ have not, within a three-year period preceding this offer, been notified of any delinquent Federal taxes in an amount that exceeds $3,500 for which the liability remains unsatisfied.

(i) Taxes are considered delinquent if both of the following criteria apply:

(A) The tax liability is finally determined. The liability is finally determined if it has been assessed. A liability is not finally determined if there is a pending administrative or judicial challenge. In the case of a judicial challenge to the liability, the liability is not finally determined until all judicial appeal rights have been exhausted.

(B) The taxpayer is delinquent in making payment. A taxpayer is delinquent if the taxpayer has failed to pay the tax liability when full payment was due and required. A taxpayer is not delinquent in cases where enforced collection action is precluded.

(ii) Examples.

(A) The taxpayer has received a statutory notice of deficiency, under I.R.C. §6212, which entitles the taxpayer to seek Tax Court review of a proposed tax deficiency. This is not a delinquent tax because it is not a final tax liability. Should the taxpayer seek Tax Court review, this will not be a final tax liability until the taxpayer has exercised all judicial appeal rights.

(B) The IRS has filed a notice of Federal tax lien with respect to an assessed tax liability, and the taxpayer has been issued a notice under I.R.C. §6320 entitling the taxpayer to request a hearing with the IRS Office of Appeals contesting the lien filing, and to further appeal to the Tax Court if the IRS determines to sustain the lien filing. In the course of the hearing, the taxpayer is entitled to contest the underlying tax liability because the taxpayer has had no prior opportunity to contest the liability. This is not a delinquent tax because it is not a final tax liability. Should the taxpayer seek tax court review, this will not be a final tax liability until the taxpayer has exercised all judicial appeal rights.

(C) The taxpayer has entered into an installment agreement pursuant to I.R.C. §6159. The taxpayer is making timely payments and is in full compliance with the agreement terms. The taxpayer is not delinquent because the taxpayer is not currently required to make full payment.

(D) The taxpayer has filed for bankruptcy protection. The taxpayer is not delinquent because enforced collection action is stayed under 11 U.S.C. §362 (the Bankruptcy Code).

(i) Certification Regarding Knowledge of Child Labor for Listed End Products (Executive Order 13126). [The Contracting Officer must list in paragraph (i)(1) any end products being acquired under this solicitation that are included in the List of Products Requiring Contractor Certification as to Forced or Indentured Child Labor, unless excluded at 22.1503(b).]

(1) Listed end products.

| Listed End Product | Listed Countries of Origin |
|---|---|
| _____ | _____ |
| _____ | _____ |

(2) Certification. [If the Contracting Officer has identified end products and countries of origin in paragraph (i)(1) of this provision, then the offeror must certify to either (i)(2)(i) or (i)(2)(ii) by checking the appropriate block.]

(i) The offeror will not supply any end product listed in paragraph (i)(1) of this provision that was mined, produced, or manufactured in the corresponding country as listed for that product.

(ii) The offeror may supply an end product listed in paragraph (i)(1) of this provision that was mined, produced, or manufactured in the corresponding country as listed for that product. The offeror certifies that it has made a good faith effort to determine whether forced or indentured child labor was used to mine, produce, or manufacture any such end product furnished under this

contract. On the basis of those efforts, the offeror certifies that it is not aware of any such use of child labor.

(j) Place of manufacture. (Does not apply unless the solicitation is predominantly for the acquisition of manufactured end products.) For statistical purposes only, the offeror shall indicate whether the place of manufacture of the end products it expects to provide in response to this solicitation is predominantly-

(1) □ In the United States (Check this box if the total anticipated price of offered end products manufactured in the United States exceeds the total anticipated price of offered end products manufactured outside the United States); or

(2) □ Outside the United States.

(k) Certificates regarding exemptions from the application of the Service Contract Labor Standards (Certification by the offeror as to its compliance with respect to the contract also constitutes its certification as to compliance by its subcontractor if it subcontracts out the exempt services.) [The contracting officer is to check a box to indicate if paragraph (k)(1) or (k)(2) applies.]

(1) Maintenance, calibration, or repair of certain equipment as described in FAR 22.1003-4(c)(1). The offeror □ does □ does not certify that–

(i) The items of equipment to be serviced under this contract are used regularly for other than Governmental purposes and are sold or traded by the offeror (or subcontractor in the case of an exempt subcontract) in substantial quantities to the general public in the course of normal business operations;

(ii) The services will be furnished at prices which are, or are based on, established catalog or market prices (see FAR 22.1003-4(c)(2)(ii)) for the maintenance, calibration, or repair of such equipment; and

(iii) The compensation (wage and fringe benefits) plan for all service employees performing work under the contract will be the same as that used for these employees and equivalent employees servicing the same equipment of commercial customers.

(2) Certain services as described in FAR 22.1003-4(d)(1). The offeror □ does □ does not certify that-

(i) The services under the contract are offered and sold regularly to non-Governmental customers, and are provided by the offeror (or subcontractor in the case of an exempt subcontract) to the general public in substantial quantities in the course of normal business operations;

(ii) The contract services will be furnished at prices that are, or are based on, established catalog or market prices (see FAR 22.1003-4(d)(2)(iii));

(iii) Each service employee who will perform the services under the contract will spend only a small portion of his or her time (a monthly average of less than 20 percent of the available hours on an annualized basis, or less than 20 percent of available hours during the contract period if the contract period is less than a month) servicing the Government contract; and

(iv) The compensation (wage and fringe benefits) plan for all service employees performing work under the contract is the same as that used for these employees and equivalent employees servicing commercial customers.

(3) If paragraph (k)(1) or (k)(2) of this clause applies–

(i) If the offeror does not certify to the conditions in paragraph (k)(1) or (k)(2) and the Contracting Officer did not attach a Service Contract Labor Standards wage determination to the solicitation, the offeror shall notify the Contracting Officer as soon as possible; and

(ii) The Contracting Officer may not make an award to the offeror if the offeror fails to execute the certification in paragraph (k)(1) or (k)(2) of this clause or to contact the Contracting Officer as required in paragraph (k)(3)(i) of this clause.

(l) Taxpayer Identification Number (TIN) ( 26 U.S.C. 6109, 31 U.S.C. 7701). (Not applicable if the offeror is required to provide this information to the SAM to be eligible for award.)

(1) All offerors must submit the information required in paragraphs (l)(3) through (l)(5) of this provision to comply with debt collection requirements of 31 U.S.C. 7701(c) and 3325(d), reporting requirements of 26 U.S.C. 6041, 6041A, and 6050M, and implementing regulations issued by the Internal Revenue Service (IRS).

(2) The TIN may be used by the Government to collect and report on any delinquent amounts arising out of the offeror's relationship with the Government (31 U.S.C. 7701(c)(3)). If the resulting contract is subject to the payment reporting requirements described in FAR 4.904, the TIN provided hereunder may be matched with IRS records to verify the accuracy of the offeror's TIN.

(3) Taxpayer Identification Number (TIN).

TIN: _____.

TIN has been applied for.

TIN is not required because:

Offeror is a nonresident alien, foreign corporation, or foreign partnership that does not have income effectively connected with the conduct of a trade or business in the United States and does not have an office or place of business or a fiscal paying agent in the United States;

Offeror is an agency or instrumentality of a foreign government;

Offeror is an agency or instrumentality of the Federal Government.

(4) Type of organization.

Sole proprietorship;

Partnership;

Corporate entity (not tax-exempt);

Corporate entity (tax-exempt);

Government entity (Federal, State, or local);

Foreign government;

International organization per 26 CFR1.6049-4;

Other _____.

(5) Common parent.

Offeror is not owned or controlled by a common parent;

Name and TIN of common parent:

Name _____.

TIN _____.

(m) Restricted business operations in Sudan. By submission of its offer, the offeror certifies that the offeror does not conduct any restricted business operations in Sudan.

(n) Prohibition on Contracting with Inverted Domestic Corporations.

(1) Government agencies are not permitted to use appropriated (or otherwise made available) funds for contracts with either an inverted domestic corporation, or a subsidiary of an inverted domestic corporation, unless the exception at 9.108-2(b) applies or the requirement is waived in accordance with the procedures at 9.108-4.

(2) Representation. The Offeror represents that–

(i) It □ is, □ is not an inverted domestic corporation; and

(ii) It □ is, □ is not a subsidiary of an inverted domestic corporation.

(o) Prohibition on contracting with entities engaging in certain activities or transactions relating to Iran.

(1) The offeror shall e-mail questions concerning sensitive technology to the Department of State at CISADA106@state.gov.

(2) Representation and Certifications. Unless a waiver is granted or an exception applies as provided in paragraph (o)(3) of this provision, by submission of its offer, the offeror-

(i) Represents, to the best of its knowledge and belief, that the offeror does not export any sensitive technology to the government of Iran or any entities or individuals owned or controlled by, or acting on behalf or at the direction of, the government of Iran;

(ii) Certifies that the offeror, or any person owned or controlled by the offeror, does not engage in any activities for which sanctions may be imposed under section 5 of the Iran Sanctions Act; and

(iii) Certifies that the offeror, and any person owned or controlled by the offeror, does not knowingly engage in any transaction that exceeds the threshold at FAR 25.703-2(a)(2) with Iran's Revolutionary Guard Corps or any of its officials, agents, or affiliates, the property and interests in property of which are blocked pursuant to the International Emergency Economic

Powers Act (et seq.) (see OFAC's Specially Designated Nationals and Blocked Persons List at https://www.treasury.gov/resource-center/sanctions/SDN-List/Pages/default.aspx).

(3) The representation and certification requirements of paragraph (o)(2) of this provision do not apply if-

(i) This solicitation includes a trade agreements certification (e.g., 52.212-3(g) or a comparable agency provision); and

(ii) The offeror has certified that all the offered products to be supplied are designated country end products.

(p) Ownership or Control of Offeror. (Applies in all solicitations when there is a requirement to be registered in SAM or a requirement to have a unique entity identifier in the solicitation).

(1) The Offeror represents that it □ has or □ does not have an immediate owner. If the Offeror has more than one immediate owner (such as a joint venture), then the Offeror shall respond to paragraph (2) and if applicable, paragraph (3) of this provision for each participant in the joint venture.

(2) If the Offeror indicates "has" in paragraph (p)(1) of this provision, enter the following information:

Immediate owner CAGE code: _____.

Immediate owner legal name: _____.

(Do not use a "doing business as" name)

Is the immediate owner owned or controlled by another entity: □ Yes or □ No.

(3) If the Offeror indicates "yes" in paragraph (p)(2) of this provision, indicating that the immediate owner is owned or controlled by another entity, then enter the following information:

Highest-level owner CAGE code: _____.

Highest-level owner legal name: _____.

(Do not use a "doing business as" name)

(q) Representation by Corporations Regarding Delinquent Tax Liability or a Felony Conviction under any Federal Law.

(1) As required by sections 744 and 745 of Division E of the Consolidated and Further Continuing Appropriations Act, 2015 (Pub. L. 113-235), and similar provisions, if contained in subsequent appropriations acts, The Government will not enter into a contract with any corporation that–

(i) Has any unpaid Federal tax liability that has been assessed, for which all judicial and administrative remedies have been exhausted or have lapsed, and that is not being paid in a timely manner pursuant to an agreement with the authority responsible for collecting the tax liability, where the awarding agency is aware of the unpaid tax liability, unless an agency has considered suspension or debarment of the corporation and made a determination that suspension or debarment is not necessary to protect the interests of the Government; or

(ii) Was convicted of a felony criminal violation under any Federal law within the preceding 24 months, where the awarding agency is aware of the conviction, unless an agency has considered suspension or debarment of the corporation and made a determination that this action is not necessary to protect the interests of the Government.

(2) The Offeror represents that–

(i) It is □ is not □ a corporation that has any unpaid Federal tax liability that has been assessed, for which all judicial and administrative remedies have been exhausted or have lapsed, and that is not being paid in a timely manner pursuant to an agreement with the authority responsible for collecting the tax liability; and

(ii) It is □ is not □ a corporation that was convicted of a felony criminal violation under a Federal law within the preceding 24 months.

(r) Predecessor of Offeror. (Applies in all solicitations that include the provision at 52.204-16, Commercial and Government Entity Code Reporting.)

(1) The Offeror represents that it □ is or □ is not a successor to a predecessor that held a Federal contract or grant within the last three years.

(2) If the Offeror has indicated "is" in paragraph (r)(1) of this provision, enter the following information for all predecessors that held a Federal contract or grant within the last three years (if more than one predecessor, list in reverse chronological order):

Predecessor CAGE code: (or mark "Unknown").

Predecessor legal name: ____.

(Do not use a "doing business as" name).

(s) [Reserved].

(t) Public Disclosure of Greenhouse Gas Emissions and Reduction Goals. Applies in all solicitations that require offerors to register in SAM (12.301(d)(1)).

(1) This representation shall be completed if the Offeror received $7.5 million or more in contract awards in the prior Federal fiscal year. The representation is optional if the Offeror received less than $7.5 million in Federal contract awards in the prior Federal fiscal year.

(2) Representation. [Offeror to check applicable block(s) in paragraph (t)(2)(i) and (ii)].

(i) The Offeror (itself or through its immediate owner or highest-level owner) □ does, □ does not publicly disclose greenhouse gas emissions, i.e., makes available on a publicly accessible website the results of a greenhouse gas inventory, performed in accordance with an accounting standard with publicly available and consistently applied criteria, such as the Greenhouse Gas Protocol Corporate Standard.

(ii) The Offeror (itself or through its immediate owner or highest-level owner) □ does, □ does not publicly disclose a quantitative greenhouse gas emissions reduction goal, i.e., make available on a publicly accessible website a target to reduce absolute emissions or emissions intensity by a specific quantity or percentage.

(iii) A publicly accessible website includes the Offeror's own website or a recognized, third-party greenhouse gas emissions reporting program.

(3) If the Offeror checked "does" in paragraphs (t)(2)(i) or (t)(2)(ii) of this provision, respectively, the Offeror shall provide the publicly accessible website(s) where greenhouse gas emissions and/or reduction goals are reported:_____.

(u)

(1) In accordance with section 743 of Division E, Title VII, of the Consolidated and Further Continuing Appropriations Act, 2015 (Pub. L. 113-235) and its successor provisions in subsequent appropriations acts (and as extended in continuing resolutions), Government agencies are not permitted to use appropriated (or otherwise made available) funds for contracts with an entity that requires employees or subcontractors of such entity seeking to report waste, fraud, or abuse to sign internal confidentiality agreements or statements prohibiting or otherwise restricting such employees or subcontractors from lawfully reporting such waste, fraud, or abuse to a designated investigative or law enforcement representative of a Federal department or agency authorized to receive such information.

(2) The prohibition in paragraph (u)(1) of this provision does not contravene requirements applicable to Standard Form 312 (Classified Information Nondisclosure Agreement), Form 4414 (Sensitive Compartmented Information Nondisclosure Agreement), or any other form issued by a Federal department or agency governing the nondisclosure of classified information.

(3) Representation. By submission of its offer, the Offeror represents that it will not require its employees or subcontractors to sign or comply with internal confidentiality agreements or statements prohibiting or otherwise restricting such employees or subcontractors from lawfully reporting waste, fraud, or abuse related to the performance of a Government contract to a designated investigative or law enforcement representative of a Federal department or agency authorized to receive such information (e.g., agency Office of the Inspector General).

(v) Covered Telecommunications Equipment or Services-Representation. Section 889(a)(1)(A) of Public Law 115-232.

(1) The Offeror shall review the list of excluded parties in the System for Award Management (SAM) (https://www.sam.gov) for entities excluded from receiving federal awards for "covered telecommunications equipment or services".

(2) The Offeror represents that it □ does, □ does not provide covered telecommunications equipment or services as a part of its offered products or services to the Government in the performance of any contract, subcontract, or other contractual instrument.

(End of Provision)

Add the following provision:

52.229-11 Tax on Certain Foreign Procurements—Notice and Representation (JUN 2020)

(a) *Definitions.* As used in this provision—

*Foreign person* means any person other than a United States person.

*Specified Federal procurement payment* means any payment made pursuant to a contract with a foreign contracting party that is for goods, manufactured or produced, or services provided in a foreign country that is not a party to an international procurement agreement with the United States. For purposes of the prior sentence, a foreign country does not include an outlying area.

*United States person* as defined in 26 U.S.C. 7701(a)(30) means—

(1) A citizen or resident of the United States;

(2) A domestic partnership;

(3) A domestic corporation;

(4) Any estate (other than a foreign estate, within the meaning of 26 U.S.C. 701(a)(31)); and

(5) Any trust if—

(i) A court within the United States is able to exercise primary supervision over the administration of the trust; and

(ii) One or more United States persons have the authority to control all substantial decisions of the trust.

(b) Unless exempted, there is a 2 percent tax of the amount of a specified Federal procurement payment on any foreign person receiving such payment. See 26 U.S.C. 5000C and its implementing regulations at 26 CFR 1.5000C-1 through 1.5000C-7.

(c) Exemptions from withholding under this provision are described at 26 CFR 1.5000C-1(d)(5) through (7). The Offeror would claim an exemption from the withholding by using the Department of the Treasury Internal Revenue Service Form W-14, Certificate of Foreign Contracting Party Receiving Federal Procurement Payments, available via the internet at ***www.irs.gov/w14***. Any exemption claimed and self-certified on the IRS Form W-14 is subject to audit by the IRS. Any disputes regarding the imposition and collection of the 26 U.S.C. 5000C tax are adjudicated by the IRS as the 26 U.S.C. 5000C tax is a tax matter, not a contract issue. The IRS Form W-14 is provided to the acquiring agency rather than to the IRS.

(d) For purposes of withholding under 26 U.S.C. 5000C, the Offeror represents that—

(1) It [__]is [__]is not a foreign person; and

(2) If the Offeror indicates "is" in paragraph (d)(1) of this provision, then the Offeror represents that—I am claiming on the IRS Form W-14 [____] a full exemption, or [____] partial or no exemption [*Offeror shall select one*] from the excise tax.

(e) If the Offeror represents it is a foreign person in paragraph (d)(1) of this provision, then—

(1) The clause at FAR 52.229-12, Tax on Certain Foreign Procurements, will be included in any resulting contract; and

(2) The Offeror shall submit with its offer the IRS Form W-14. If the IRS Form W-14 is not submitted with the offer, exemptions will not be applied to any resulting contract and the Government will withhold a full 2 percent of each payment.

(f) If the Offeror selects "is" in paragraph (d)(1) and "partial or no exemption" in paragraph (d)(2) of this provision, the Offeror will be subject to withholding in accordance with the clause at FAR 52.229-12, Tax on Certain Foreign Procurements, in any resulting contract.

(g) A taxpayer may, for a fee, seek advice from the Internal Revenue Service (IRS) as to the proper tax treatment of a transaction. This is called a private letter ruling. Also, the IRS may publish a revenue ruling, which is an official interpretation by the IRS of the Internal Revenue Code, related statutes, tax treaties, and regulations. A revenue ruling is the conclusion of the IRS on how the law is applied to a specific set of facts. **For questions relating to the interpretation of the IRS regulations go to *https://www.irs.gov/help/tax-law-questions***.

(End of provision)

**NOTE to Contracting Officer: Information and current copies of the IRS Form W-14 are available via the internet at www.irs.gov/w14.**

# ADDENDUM TO SOLICITATION PROVISIONS
# FAR AND DOSAR PROVISIONS NOT PRESCRIBED IN PART 12

52.252-1 SOLICITATION PROVISIONS INCORPORATED BY REFERENCE (FEB 1998)

This solicitation incorporates one or more solicitation provisions by reference, with the same force and effect as if they were given in full text. Upon request, the Contracting Officer will make their full text available. In addition, the full text of a clause may be accessed electronically at Acquisition.gov this address is subject to change.

If the Federal Acquisition Regulation (FAR) is not available at the location indicated above, use the Department of State Acquisition website at e-CFR to see the links to the FAR. You may also use an Internet "search engine" (for example, Google, Yahoo or Excite) to obtain the latest location of the most current FAR.

The following Federal Acquisition Regulation solicitation provisions are incorporated by reference:

52.204-24 REPRESENTATION REGARDING CERTAIN TELECOMMUNICATIONS AND VIDEO SURVEILLANCE SERVICES OR EQUIPMENT (AUG 2019)

52.225-25 PROHIBITION ON CONTRACTING WITH ENTITIES ENGAGING IN CERTAIN ACTIVITIES OR TRANSACTIONS RELATING TO IRAN—REPRESENTATION AND CERTIFICATIONS (JUN 2020)

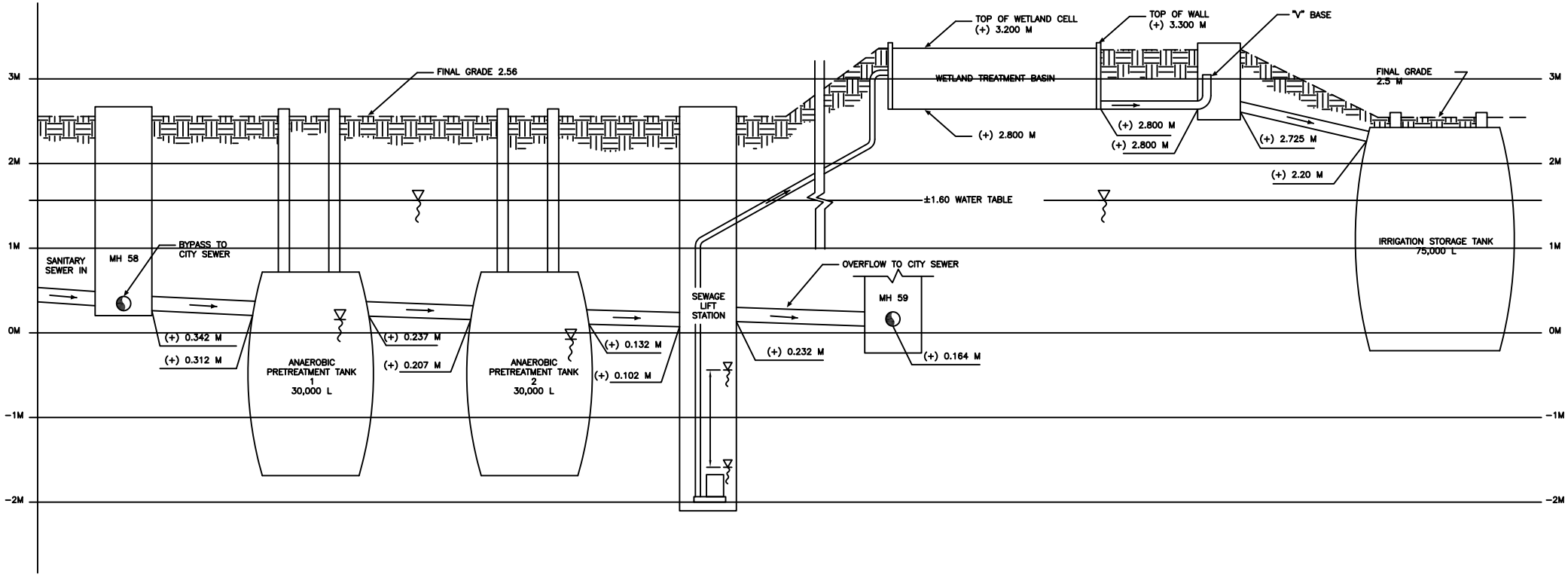


NOTES:

1. IRRIGATION STORAGE TANK ELEVATIONS CHANGED PER RFI HOK–0104.
2. ANAEROBIC PRETREATMENT TANK ELEVATIONS CHANGED PER RFP 013A.

FLOWTITE PRODUCTS

SEPTIC / WASTE WATER

SHELL CODES: 2-E8D07SD

SEE PMR #

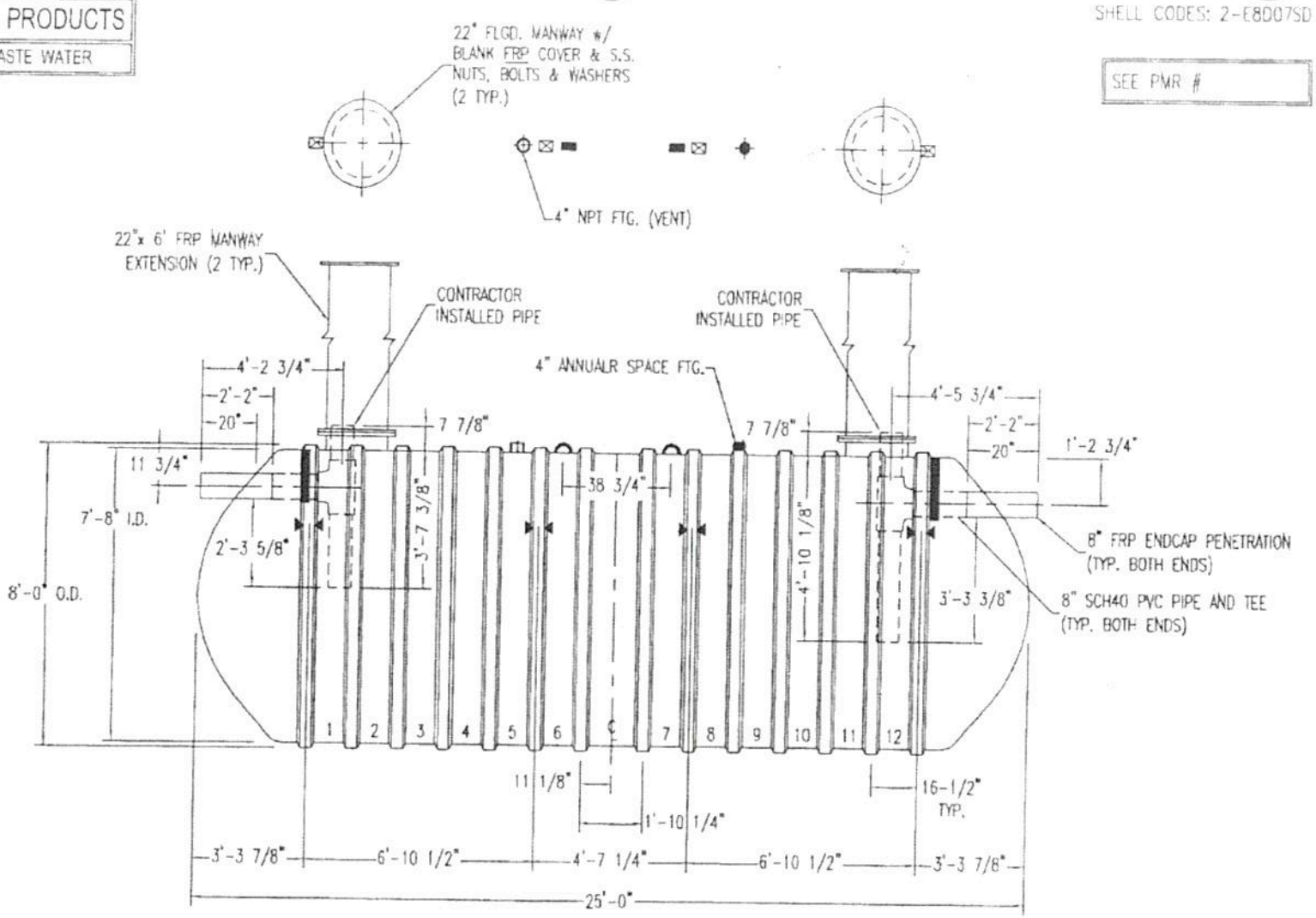


"J.A. JONES / THE DUNES - TANK #1"

NOTES:

- ⊠ HOLD DOWN STRAP CLIP
- ▶◀ HOLD DOWN STRAP LOCATION
- ▬ TOP MOUNTED LIFT LUG
- ◠ SIDE MOUNTED LIFT LUG

| | | |
|---|---|---|
| DWT-6 TYPE II (8')-8000 | | DATE 3/20/02 |
| BELCOR, INC. | | DRAWN BY K.A.SOEDER |
| CONTAINMENT SOLUTIONS | CAPACITY 7,796 | REVISED: 4/22/02 |
| | WEIGHTS DRY/WET 4200/5600 | DWG NUMBER: 4327.DWG |

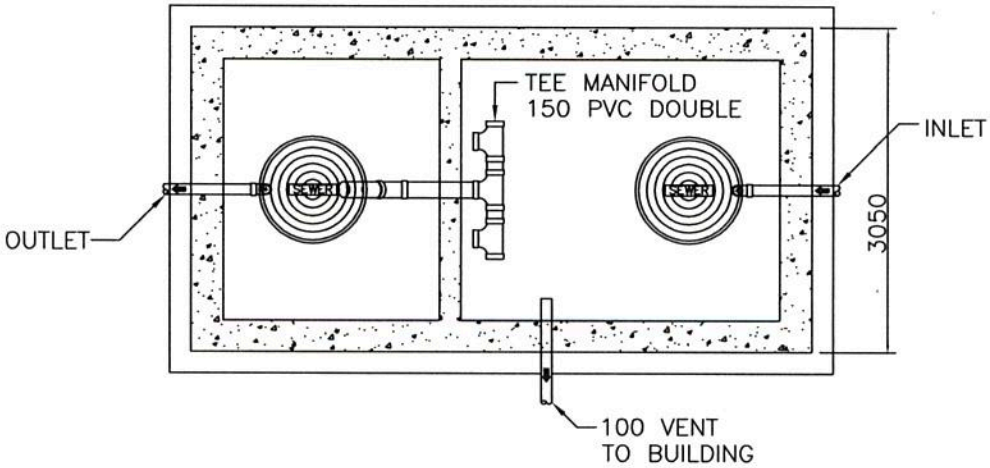


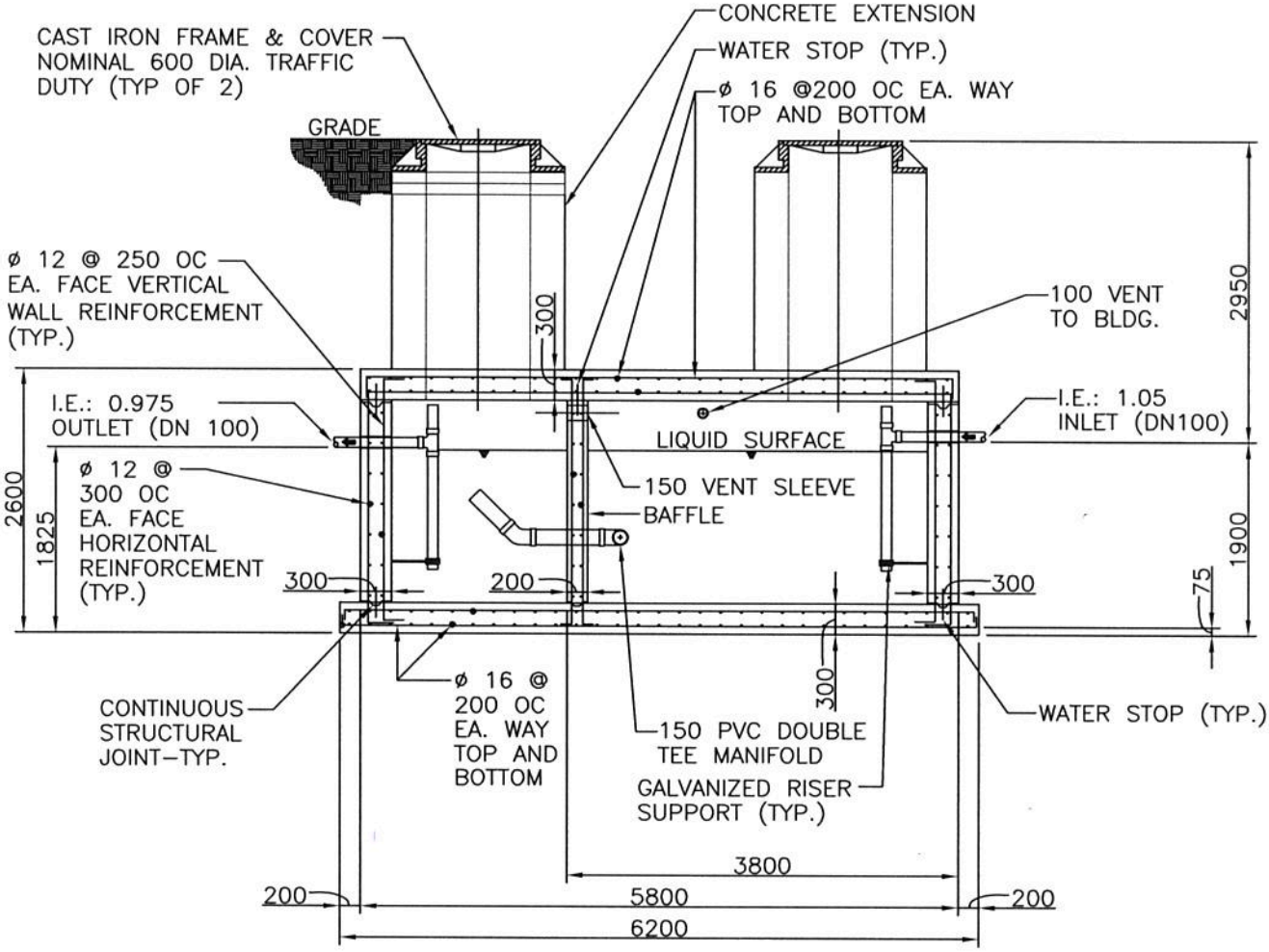


A

P.80–02

# EXTERIOR GREASE TRAP PLAN & SECTION

1:50